121-100 - Type C

Series 74 Helical Convoluted Tubing (MIL-T-81914) Natural or Black PFA, FEP, PTFE, Tefzel® (ETFE) or PEEK

121-100-1-1-16 B E T H

Product Series

Basic No.

Class
- 1 = Standard Wall
- 2 = Thin Wall *

Convolution
- 1 = Standard
- 2 = Close

Dash No. (Table I)

Color
- B = Black
- C = Natural

Material
- E = ETFE
- F = FEP
- K = PEEK ***
- P = PFA
- T = PTFE**

Shield
- C = Stainless Steel
- N = Nickel/Copper
- S = SnCuFe
- T = Tin/Copper

Jacket
- E = EPDM
- H = Hypalon®
- N = Neoprene
- V = Viton

TYPE C

EXTERNAL SHIELD AND JACKET

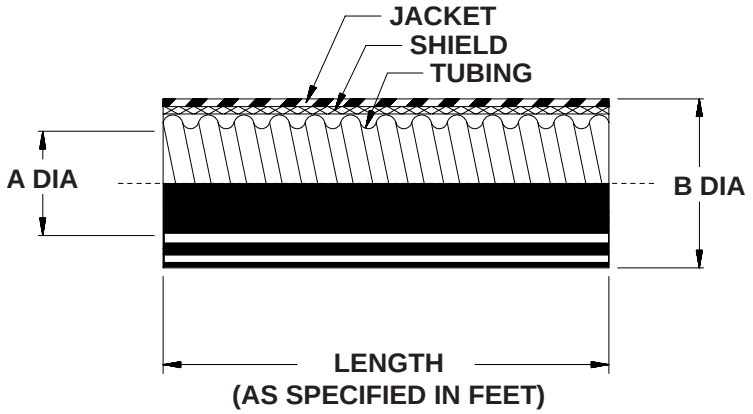

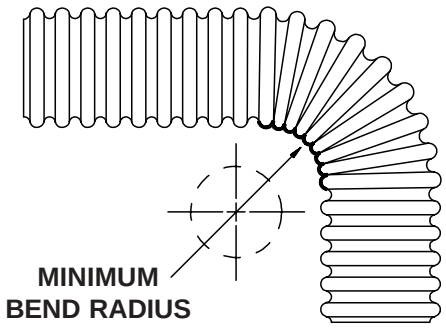

TABLE I

DASH NO.	FRACTIONAL SIZE REF	A INSIDE DIA MIN		B DIA MAX		MINIMUM BEND RADIUS	
06	3/16	.181	(4.6)	.490	(12.4)	.50	(12.7)
09	9/32	.273	(6.9)	.584	(14.8)	.75	(19.1)
10	5/16	.306	(7.8)	.620	(15.7)	.75	(19.1)
12	3/8	.359	(9.1)	.680	(17.3)	.88	(22.4)
14	7/16	.427	(10.8)	.741	(18.8)	1.00	(25.4)
16	1/2	.480	(12.2)	.820	(20.8)	1.25	(31.8)
20	5/8	.603	(15.3)	.940	(23.9)	1.50	(38.1)
24	3/4	.725	(18.4)	1.100	(27.9)	1.75	(44.5)
28	7/8	.860	(21.8)	1.243	(31.6)	1.88	(47.8)
32	1	.970	(24.6)	1.396	(35.5)	2.25	(57.2)
40	1 1/4	1.205	(30.6)	1.709	(43.4)	2.75	(69.9)
48	1 1/2	1.437	(36.5)	2.002	(50.9)	3.25	(82.6)
56	1 3/4	1.688	(42.9)	2.327	(59.1)	3.63	(92.2)
64	2	1.937	(49.2)	2.502	(63.6)	4.25	(108.0)

Metric dimensions (mm) are in parentheses.

* Consult factory for thin-wall, close convolution combination.

** For PTFE maximum lengths - consult factory.

*** Consult factory for PEEK min/max dimensions.

© 2003 Glenair, Inc. CAGE Codes 06324 Printed in U.S.A.