INTEGRATED CIRCUITS

DATA SHEET

EEPW 電子產品世界 .com.cn

74LV541
Octal buffer/line driver (3-State)

Product specification
Supersedes data of 1997 Mar 04
IC24 Data Handbook

1997 Jun 10

Philips
Semiconductors

PHILIPS

Octal buffer/line driver (3-State) 74LV541

FEATURES

- Optimized for Low Voltage applications: 1.0 to 3.6V
- Accepts TTL input levels between V_{CC} = 2.7V and V_{CC} = 3.6V
- Typical V_{OLP} (output ground bounce) < 0.8V @ V_{CC} = 3.3V, T_{amb} = 25°C
- Typical V_{OHV} (output V_{OH} undershoot) > 2V @ V_{CC} = 3.3V, T_{amb} = 25°C
- Non-inverting outputs
- Output capability: bus driver
- I_{CC} category: MSI

DESCRIPTION

The 74LV541 is a low–voltage CMOS device and is pin and function compatible with 74HC/HCT541.

The 74LV541 is an octal non-inverting buffer/line driver with 3-State outputs. The 3-State outputs are controlled by the output enable inputs $\overline{OE}_1$ and $\overline{OE}_2$.

A HIGH on $\overline{OE}$n causes the outputs to assume a high impedance OFF–state.

QUICK REFERENCE DATA

GND = 0V; T_{amb} = 25°C; $t_r = t_f \leq 2.5$ ns

SYMBOL	PARAMETER	CONDITIONS	TYPICAL	UNIT
t_{PHL}/t_{PLH}	Propagation delay A_n to Y_n	C_L = 15pF V_{CC} = 3.3V	10	ns
C_I	Input capacitance		3.5	pF
C_{PD}	Power dissipation capacitance per buffer	V_I = GND to V_{CC} [1]	37	pF

NOTES:

1. C_{PD} is used to determine the dynamic power dissipation (P_D in µW)
   $P_D = C_{PD} \times V_{CC}^2 \times f_i + \Sigma (C_L \times V_{CC}^2 \times f_o)$ where:
   f_i = input frequency in MHz; C_L = output load capacity in pF;
   f_o = output frequency in MHz; V_{CC} = supply voltage in V;
   $\Sigma (C_L \times V_{CC}^2 \times f_o)$ = sum of the outputs.

ORDERING INFORMATION

PACKAGES	TEMPERATURE RANGE	OUTSIDE NORTH AMERICA	NORTH AMERICA	PKG. DWG. #
20-Pin Plastic DIL	–40°C to +125°C	74LV541 N	74LV541 N	SOT146-1
20-Pin Plastic SO	–40°C to +125°C	74LV541 D	74L541 D	SOT163-1
20-Pin Plastic SSOP Type II	–40°C to +125°C	74LV541 DB	74LV541 DB	SOT339-1
20-Pin Plastic TSSOP Type I	–40°C to +125°C	74LV541 PW	74LV541PW DH	SOT360-1

PIN DESCRIPTION

PIN NUMBER	SYMBOL	FUNCTION
1, 19	$\overline{OE}_1$, $\overline{OE}_2$	Output enable input (active-LOW)
2, 3, 4, 5, 6, 7, 8, 9	A_0 to A_7	Data inputs
10	GND	Ground (0V)
18, 17, 16, 15, 14, 13, 12, 11	Y_0 to Y_7	Bus outputs
20	V_{CC}	Positive supply voltage

FUNCTION TABLE

INPUTS			OUTPUT
$\overline{OE}_1$	$\overline{OE}_2$	nA	nY
L	L	L	L
L	L	H	H
X	H	X	Z
H	X	X	Z

H = HIGH voltage level
L = LOW voltage level
X = Don't care
Z = High impedance OFF-state

EEPW 电子产品世界 .com.cn

PIN CONFIGURATION

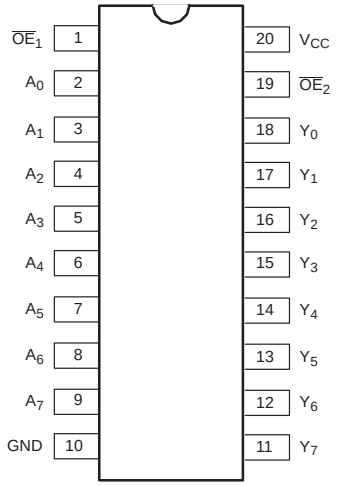

SV00680

LOGIC SYMBOL (IEEE/IEC)

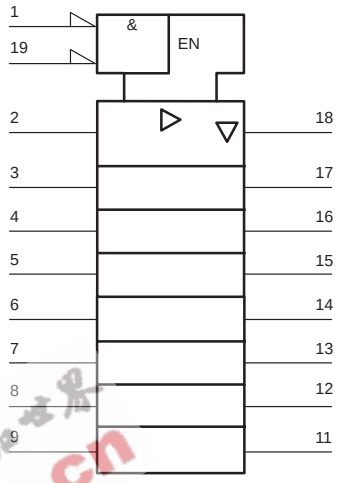

SV00682

LOGIC SYMBOL

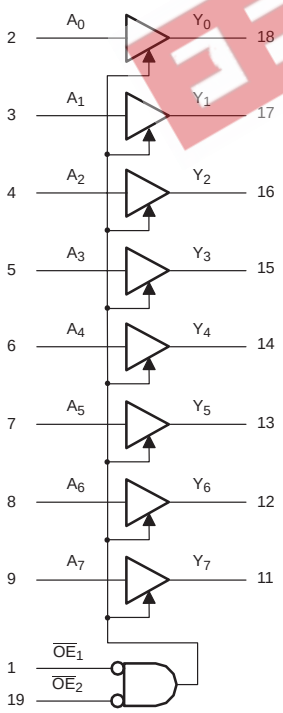

SV00681

FUNCTIONAL DIAGRAM

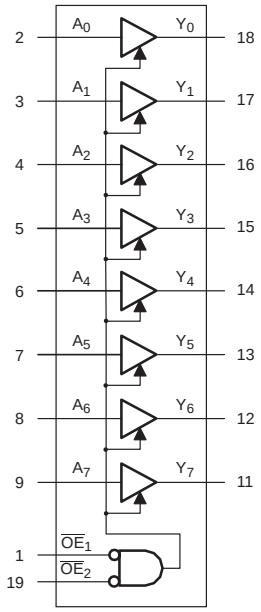

SV00683

EEPW .com.cn 电子产品世界

RECOMMENDED OPERATING CONDITIONS

SYMBOL	PARAMETER	CONDITIONS	MIN	TYP	MAX	UNIT
V_{CC}	DC supply voltage	See Note 1	1.0	3.3	3.6	V
V_I	Input voltage		0	–	V_{CC}	V
V_O	Output voltage		0	–	V_{CC}	V
T_{amb}	Operating ambient temperature range in free air	See DC and AC characteristics	–40 –40		+85 +125	°C
t_r, t_f	Input rise and fall times	V_{CC} = 1.0V to 2.0V V_{CC} = 2.0V to 2.7V V_{CC} = 2.7V to 3.6V	– – –	– – – –	500 200 100	ns/V

NOTE:
1. The LV is guaranteed to function down to V_{CC} = 1.0V (input levels GND or V_{CC}); DC characteristics are guaranteed from V_{CC} = 1.2V to V_{CC} = 3.6V.

ABSOLUTE MAXIMUM RATINGS[1, 2]

In accordance with the Absolute Maximum Rating System (IEC 134).
Voltages are referenced to GND (ground = 0V).

SYMBOL	PARAMETER	CONDITIONS	RATING	UNIT
V_{CC}	DC supply voltage		–0.5 to +4.6	V
$\pm I_{IK}$	DC input diode current	V_I < –0.5 or V_I > V_{CC} + 0.5V	20	mA
$\pm I_{OK}$	DC output diode current	V_O < –0.5 or V_O > V_{CC} + 0.5V	50	mA
$\pm I_O$	DC output source or sink current – bus driver outputs	–0.5V < V_O < V_{CC} + 0.5V	35	mA
$\pm I_{GND}$, $\pm I_{CC}$	DC V_{CC} or GND current for types with –bus driver outputs		70	mA
T_{stg}	Storage temperature range		–65 to +150	°C
P_{tot}	Power dissipation per package –plastic DIL –plastic mini-pack (SO) –plastic shrink mini-pack (SSOP and TSSOP)	for temperature range: –40 to +125°C above +70°C derate linearly with 12mW/K above +70°C derate linearly with 8 mW/K above +60°C derate linearly with 5.5 mW/K	750 500 400	mW

NOTES:
1. Stresses beyond those listed may cause permanent damage to the device. These are stress ratings only and functional operation of the device at these or any other conditions beyond those indicated under “recommended operating conditions” is not implied. Exposure to absolute-maximum-rated conditions for extended periods may affect device reliability.
2. The input and output voltage ratings may be exceeded if the input and output current ratings are observed.

EEPW 电子产品世界 .com.cn

DC CHARACTERISTICS FOR THE LV FAMILY

Over recommended operating conditions. Voltages are referenced to GND (ground = 0V).

SYMBOL	PARAMETER	TEST CONDITIONS	LIMITS					UNIT
			-40°C to +85°C			-40°C to +125°C		
			MIN	TYP[1]	MAX	MIN	MAX	
V_{IH}	HIGH level Input voltage	V_{CC} = 1.2V	0.9			0.9		V
		V_{CC} = 2.0V	1.4			1.4		
		V_{CC} = 2.7 to 3.6V	2.0			2.0		
V_{IL}	LOW level Input voltage	V_{CC} = 1.2V			0.3		0.3	V
		V_{CC} = 2.0V			0.6		0.6	
		V_{CC} = 2.7 to 3.6V			0.8		0.8	
V_{OH}	HIGH level output voltage; all outputs	V_{CC} = 1.2V; $V_I = V_{IH}$ or V_{IL}; $-I_O$ = 100µA		1.2				V
		V_{CC} = 2.0V; $V_I = V_{IH}$ or V_{IL}; $-I_O$ = 100µA	1.8	2.0		1.8		
		V_{CC} = 2.7V; $V_I = V_{IH}$ or V_{IL}; $-I_O$ = 100µA	2.5	2.7		2.5		
		V_{CC} = 3.0V; $V_I = V_{IH}$ or V_{IL}; $-I_O$ = 100µA	2.8	3.0		2.8		
	HIGH level output voltage; BUS driver outputs	V_{CC} = 3.0V; $V_I = V_{IH}$ or V_{IL}; $-I_O$ = 8mA	2.40	2.82		2.20		
V_{OL}	LOW level output voltage; all outputs	V_{CC} = 1.2V; $V_I = V_{IH}$ or V_{IL}; I_O = 100µA		0				V
		V_{CC} = 2.0V; $V_I = V_{IH}$ or V_{IL}; I_O = 100µA		0	0.2		0.2	
		V_{CC} = 2.7V; $V_I = V_{IH}$ or V_{IL}; I_O = 100µA		0	0.2		0.2	
		V_{CC} = 3.0V; $V_I = V_{IH}$ or V_{IL}; I_O = 100µA		0	0.2		0.2	
	LOW level output voltage; BUS driver outputs	V_{CC} = 3.0V; $V_I = V_{IH}$ or V_{IL}; I_O = 8mA		0.20	0.40		0.50	
I_I	Input leakage current	V_{CC} = 3.6V; $V_I = V_{CC}$ or GND			1.0		1.0	µA
I_{OZ}	3-State output OFF-state current	V_{CC} = 3.6V; $V_I = V_{IH}$ or V_{IL}; $V_O = V_{CC}$ or GND			5		10	µA
I_{CC}	Quiescent supply current; MSI	V_{CC} = 3.6V; $V_I = V_{CC}$ or GND; I_O = 0			20.0		160	µA
ΔI_{CC}	Additional quiescent supply current per input	V_{CC} = 2.7V to 3.6V; $V_I = V_{CC} - 0.6V$			500		850	µA

NOTE:

1. All typical values are measured at T_{amb} = 25°C.

EEPW 電子產品世界 .com.cn

AC CHARACTERISTICS

GND = 0V; $t_r = t_f \leq 2.5$ns; $C_L = 50$pF; $R_L = 1K\Omega$

SYMBOL	PARAMETER	WAVEFORM	CONDITION	LIMITS					UNIT
				–40 to +85 °C			–40 to +125 °C		
			V_{CC}(V)	MIN	TYP[1]	MAX	MIN	MAX	
t_{PHL}/t_{PLH}	Propagation delay A_n to Y_n	Figure 1	1.2	–	60	–	–	–	ns
			2.0	–	20	39	–	46	
			2.7	–	15	29	–	34	
			3.0 to 3.6	–	11[2]	23	–	27	
t_{PZH}/t_{PZL}	3-State output enable time $\overline{OE}_n$ to Y_n	Figure 2	1.2	–	100	–	–	–	ns
			2.0	–	34	65	–	77	
			2.7	–	25	48	–	56	
			3.0 to 3.6	–	19[2]	38	–	45	
t_{PHZ}/t_{PLZ}	3-State output disable time $\overline{OE}_n$ to Y_n	Figure 2	1.2	–	100	–	–	–	ns
			2.0	–	36	66	–	78	
			2.7	–	27	48	–	58	
			3.0 to 3.6	–	21[2]	39	–	47	

NOTES:

1. Unless otherwise stated, all typical values are at $T_{amb} = 25°C$.
2. Typical value measured at $V_{CC} = 3.3V$.

AC WAVEFORMS

$V_M = 1.5V$ at $V_{CC} \geq 2.7V$
$V_M = 0.5 * V_{CC}$ at $V_{CC} < 2.7V$
V_{OL} and V_{OH} are the typical output voltage drop that occur with the output load.
$V_X = V_{OL} + 0.3V$ at $V_{CC} \geq 2.7V$
$V_X = V_{OL} + 0.1V_{CC}$ at $V_{CC} < 2.7V$
$V_Y = V_{OH} – 0.3V$ at $V_{CC} \geq 2.7V$
$V_Y = V_{OH} – 0.1 V_{CC}$ at $V_{CC} < 2.7V$

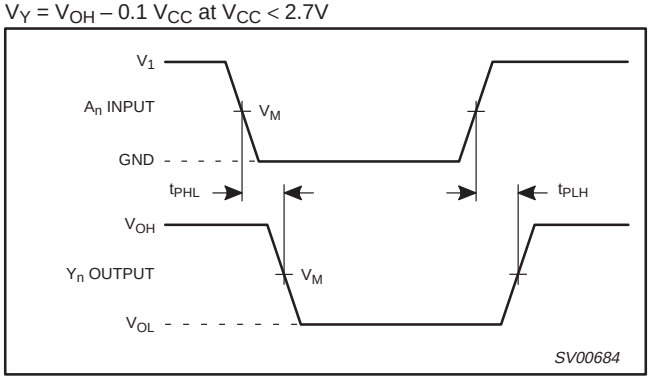

Figure 1. Input (A_n) to output (Y_n) propagation delays

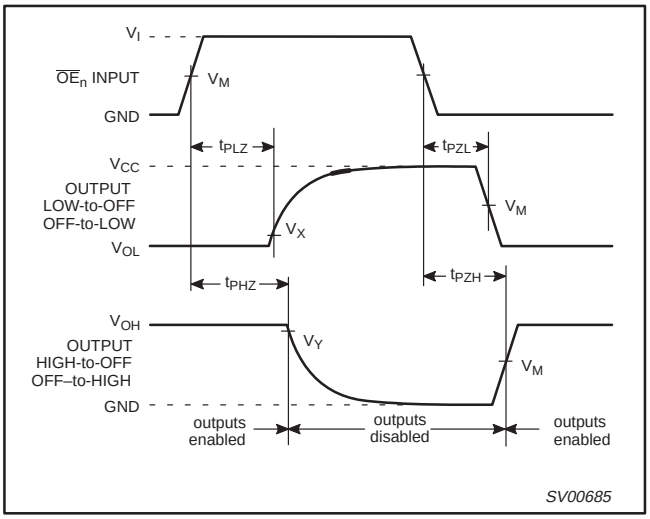

Figure 2. 3-State enable and disable times

EEPW .com.cn

TEST CIRCUIT

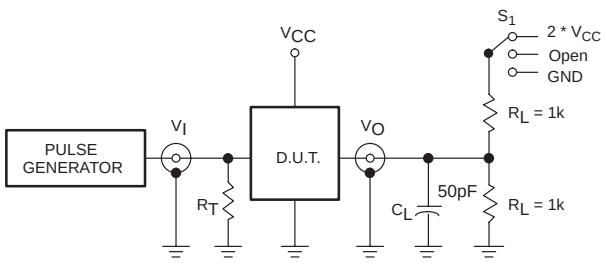

Test Circuit for switching times

DEFINITIONS

R_L = Load resistor

C_L = Load capacitance includes jig and probe capacitance

R_T = Termination resistance should be equal to Z_{OUT} of pulse generators.

SWITCH POSITION

TEST	S_1
t_{PLH}/t_{PHL}	Open
t_{PLZ}/t_{PZL}	2 * V_{CC}
t_{PHZ}/t_{PZH}	GND

V_{CC}	V_I
< 2.7V	V_{CC}
2.7–3.6V	2.7V

SV00895

Figure 3. Load circuitry for switching times

EEPW 電子產品世界 .com.cn

DIP20: plastic dual in-line package; 20 leads (300 mil) SOT146-1

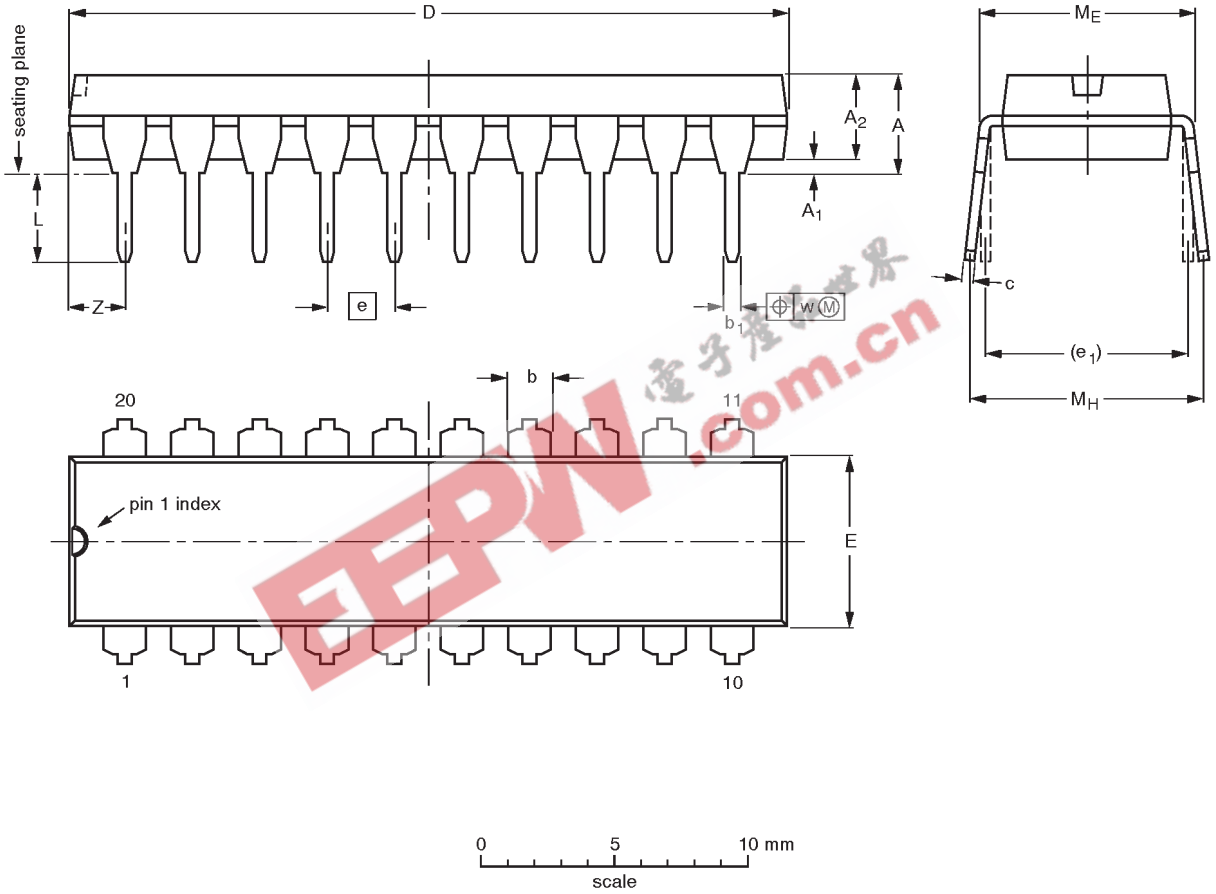

DIMENSIONS (inch dimensions are derived from the original mm dimensions)

UNIT	A max.	A_1 min.	A_2 max.	b	b_1	c	D (1)	E (1)	e	e_1	L	M_E	M_H	w	Z (1) max.
mm	4.2	0.51	3.2	1.73 1.30	0.53 0.38	0.36 0.23	26.92 26.54	6.40 6.22	2.54	7.62	3.60 3.05	8.25 7.80	10.0 8.3	0.254	2.0
inches	0.17	0.020	0.13	0.068 0.051	0.021 0.015	0.014 0.009	1.060 1.045	0.25 0.24	0.10	0.30	0.14 0.12	0.32 0.31	0.39 0.33	0.01	0.078

Note

1. Plastic or metal protrusions of 0.25 mm maximum per side are not included.

OUTLINE VERSION	REFERENCES				EUROPEAN PROJECTION	ISSUE DATE
	IEC	JEDEC	EIAJ			
SOT146-1			SC603			~~92-11-17~~ 95-05-24

SO20: plastic small outline package; 20 leads; body width 7.5 mm SOT163-1

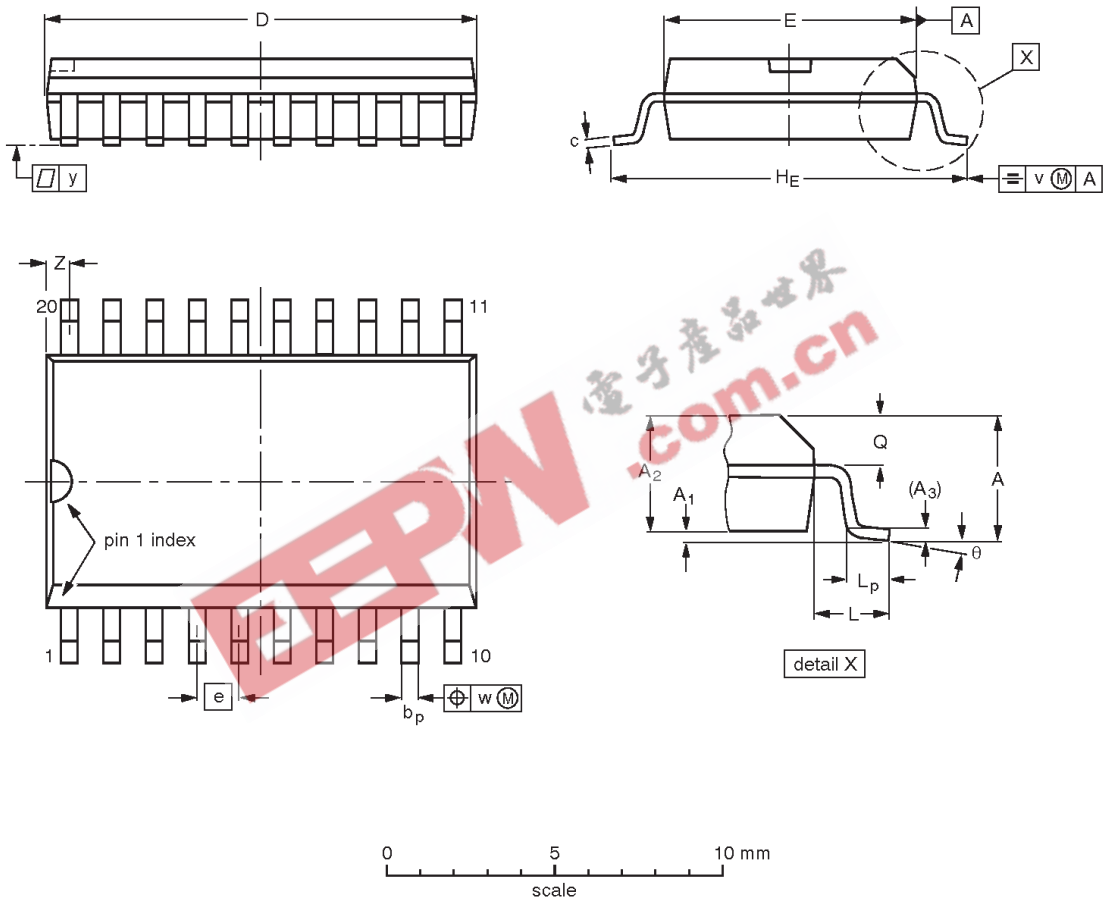

DIMENSIONS (inch dimensions are derived from the original mm dimensions)

UNIT	A max.	A_1	A_2	A_3	b_p	c	D (1)	E (1)	e	H_E	L	L_p	Q	v	w	y	Z (1)	θ
mm	2.65	0.30 0.10	2.45 2.25	0.25	0.49 0.36	0.32 0.23	13.0 12.6	7.6 7.4	1.27	10.65 10.00	1.4	1.1 0.4	1.1 1.0	0.25	0.25	0.1	0.9 0.4	8° 0°
inches	0.10	0.012 0.004	0.096 0.089	0.01	0.019 0.014	0.013 0.009	0.51 0.49	0.30 0.29	0.050	0.42 0.39	0.055	0.043 0.016	0.043 0.039	0.01	0.01	0.004	0.035 0.016	

Note

1. Plastic or metal protrusions of 0.15 mm maximum per side are not included.

OUTLINE VERSION	REFERENCES				EUROPEAN PROJECTION	ISSUE DATE
	IEC	JEDEC	EIAJ			
SOT163-1	075E04	MS-013AC				~~92-11-17~~ 95-01-24

SSOP20: plastic shrink small outline package; 20 leads; body width 5.3 mm **SOT339-1**

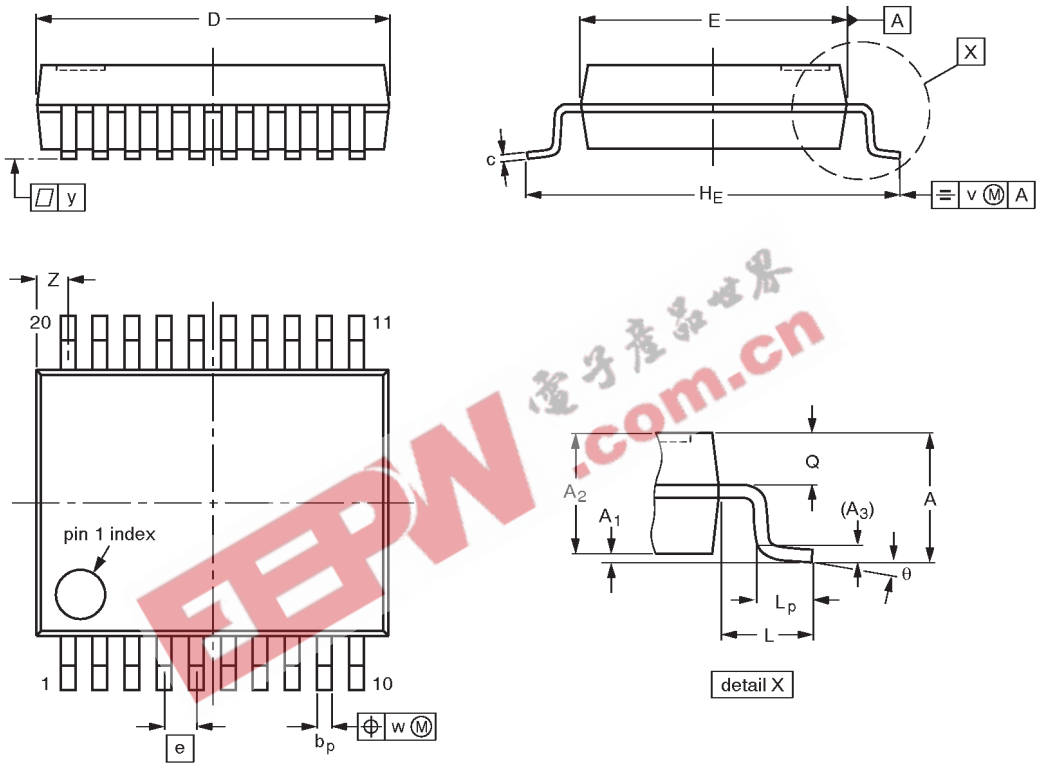

0 2.5 5 mm
scale

DIMENSIONS (mm are the original dimensions)

UNIT	A max.	A_1	A_2	A_3	b_p	c	D(1)	E(1)	e	H_E	L	L_p	Q	v	w	y	Z(1)	θ
mm	2.0	0.21 0.05	1.80 1.65	0.25	0.38 0.25	0.20 0.09	7.4 7.0	5.4 5.2	0.65	7.9 7.6	1.25	1.03 0.63	0.9 0.7	0.2	0.13	0.1	0.9 0.5	8° 0°

Note

1. Plastic or metal protrusions of 0.20 mm maximum per side are not included.

OUTLINE VERSION	REFERENCES				EUROPEAN PROJECTION	ISSUE DATE
	IEC	JEDEC	EIAJ			
SOT339-1		MO-150AE				~~93-09-08~~ 95-02-04

TSSOP20: plastic thin shrink small outline package; 20 leads; body width 4.4 mm **SOT360-1**

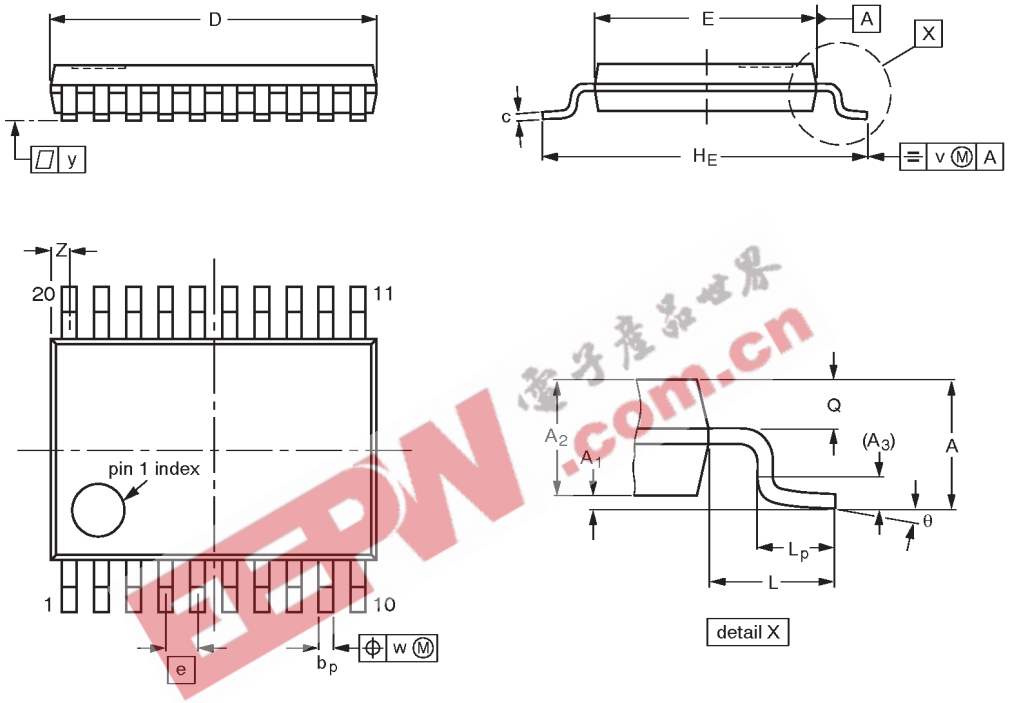

0 2.5 5 mm
scale

DIMENSIONS (mm are the original dimensions)

UNIT	A max.	A_1	A_2	A_3	b_p	c	D (1)	E (2)	e	H_E	L	L_p	Q	v	w	y	Z (1)	θ
mm	1.10	0.15 0.05	0.95 0.80	0.25	0.30 0.19	0.2 0.1	6.6 6.4	4.5 4.3	0.65	6.6 6.2	1.0	0.75 0.50	0.4 0.3	0.2	0.13	0.1	0.5 0.2	8° 0°

Notes

1. Plastic or metal protrusions of 0.15 mm maximum per side are not included.
2. Plastic interlead protrusions of 0.25 mm maximum per side are not included.

OUTLINE VERSION	REFERENCES				EUROPEAN PROJECTION	ISSUE DATE
	IEC	JEDEC	EIAJ			
SOT360-1		MO-153AC				~~93-06-16~~ 95-02-04

Octal buffer/line driver (3-State) 74LV541

EEPW 電子產品世界 .com.cn

DEFINITIONS

Data Sheet Identification	Product Status	Definition
Objective Specification	Formative or in Design	This data sheet contains the design target or goal specifications for product development. Specifications may change in any manner without notice.
Preliminary Specification	Preproduction Product	This data sheet contains preliminary data, and supplementary data will be published at a later date. Philips Semiconductors reserves the right to make changes at any time without notice in order to improve design and supply the best possible product.
Product Specification	Full Production	This data sheet contains Final Specifications. Philips Semiconductors reserves the right to make changes at any time without notice, in order to improve design and supply the best possible product.

Philips Semiconductors and Philips Electronics North America Corporation reserve the right to make changes, without notice, in the products, including circuits, standard cells, and/or software, described or contained herein in order to improve design and/or performance. Philips Semiconductors assumes no responsibility or liability for the use of any of these products, conveys no license or title under any patent, copyright, or mask work right to these products, and makes no representations or warranties that these products are free from patent, copyright, or mask work right infringement, unless otherwise specified. Applications that are described herein for any of these products are for illustrative purposes only. Philips Semiconductors makes no representation or warranty that such applications will be suitable for the specified use without further testing or modification.

LIFE SUPPORT APPLICATIONS
Philips Semiconductors and Philips Electronics North America Corporation Products are not designed for use in life support appliances, devices, or systems where malfunction of a Philips Semiconductors and Philips Electronics North America Corporation Product can reasonably be expected to result in a personal injury. Philips Semiconductors and Philips Electronics North America Corporation customers using or selling Philips Semiconductors and Philips Electronics North America Corporation Products for use in such applications do so at their own risk and agree to fully indemnify Philips Semiconductors and Philips Electronics North America Corporation for any damages resulting from such improper use or sale.

Philips Semiconductors
811 East Arques Avenue
P.O. Box 3409
Sunnyvale, California 94088–3409
Telephone 800-234-7381

© Copyright Philips Electronics North America Corporation 1998
All rights reserved. Printed in U.S.A.

print code Date of release: 05-96
Document order number: 9397-750-04452

Let's make things better.

Philips Semiconductors

PHILIPS