FAIRCHILD SEMICONDUCTOR™

November 1988
Revised August 2000

74AC273 • 74ACT273
Octal D-Type Flip-Flop

General Description

The AC273 and ACT273 have eight edge-triggered D-type flip-flops with individual D-type inputs and Q outputs. The common buffered Clock (CP) and Master Reset ($\overline{MR}$) input load and reset (clear) all flip-flops simultaneously.

The register is fully edge-triggered. The state of each D-type input, one setup time before the LOW-to-HIGH clock transition, is transferred to the corresponding flip-flop's Q output.

All outputs will be forced LOW independently of Clock or Data inputs by a LOW voltage level on the $\overline{MR}$ input. The device is useful for applications where the true output only is required and the Clock and Master Reset are common to all storage elements.

Features

- Ideal buffer for microprocessor or memory
- Eight edge-triggered D-type flip-flops
- Buffered common clock
- Buffered, asynchronous master reset
- See 377 for clock enable version
- See 373 for transparent latch version
- See 374 for 3-STATE version
- Outputs source/sink 24 mA
- 74ACT273 has TTL-compatible inputs

Ordering Code:

Order Number	Package Number	Package Description
74AC273SC	M20B	20-Lead Small Outline Integrated Circuit (SOIC), JEDEC MS-013, 0.300 Wide
74AC273SJ	M20D	20-Lead Small Outline Package (SOP), EIAJ TYPE II, 5.3mm Wide
74AC273MTC	MTC20	20-Lead Thin Shrink Small Outline Package (TSSOP), JEDEC MO-153, 4.4mm Wide
74AC273PC	N20A	20-Lead Plastic Dual-In-Line Package (PDIP), JEDEC MS-001, 0.300 Wide
74ACT273SC	M20B	20-Lead Small Outline Integrated Circuit (SOIC), JEDEC MS-013, 0.300 Wide
74ACT273SJ	M20D	20-Lead Small Outline Package (SOP), EIAJ TYPE II, 5.3mm Wide
74ACT273MTC	MTC20	20-Lead Thin Shrink Small Outline Package (TSSOP), JEDEC MO-153, 4.4mm Wide
74ACT273PC	N20A	20-Lead Plastic Dual-In-Line Package (PDIP), JEDEC MS-001, 0.300 Wide

Device also available in Tape and Reel. Specify by appending suffix letter "X" to the ordering code.

Logic Symbols

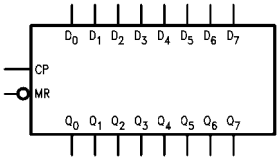

IEEE/IEC

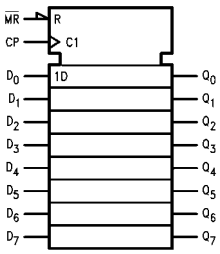

Connection Diagram

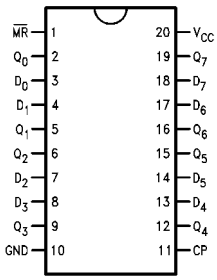

FACT™ is a trademark of Fairchild Semiconductor Corporation.

© 2000 Fairchild Semiconductor Corporation

Pin Descriptions

Pin Names	Description
D_0–D_7	Data Inputs
$\overline{MR}$	Master Reset
CP	Clock Pulse Input
Q_0–Q_7	Data Outputs

Mode Select-Function Table

Operating Mode	Inputs			Outputs
	$\overline{MR}$	CP	D_n	Q_n
Reset (Clear)	L	X	X	L
Load '1'	H	⎍	H	H
Load '0'	H	⎍	L	L

H = HIGH Voltage Level
L = LOW Voltage Level
X = Immaterial
⎍ = LOW-to-HIGH Transition

Logic Diagram

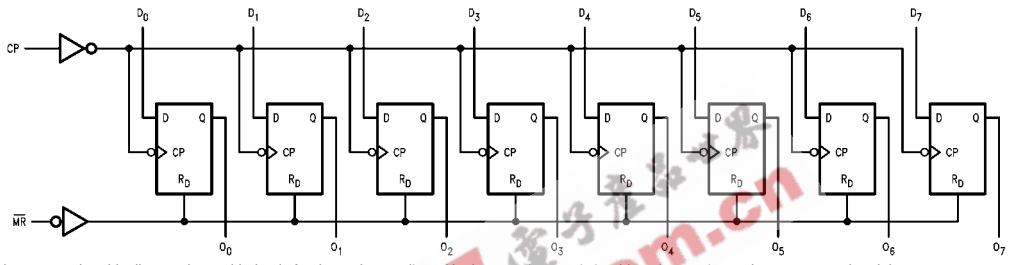

Please note that this diagram is provided only for the understanding of logic operations and should not be used to estimate propagation delays.

EEPW .com.cn

Absolute Maximum Ratings (Note 1)

Supply Voltage (V_{CC})	−0.5V to +7.0V
DC Input Diode Current (I_{IK})	
$V_I = -0.5V$	−20 mA
$V_I = V_{CC} + 0.5V$	+20 mA
DC Input Voltage (V_I)	−0.5V to V_{CC} + 0.5V
DC Output Diode Current (I_{OK})	
$V_O = -0.5V$	−20 mA
$V_O = V_{CC} + 0.5V$	+20 mA
DC Output Voltage (V_O)	−0.5V to V_{CC} + 0.5V
DC Output Source or Sink Current (I_O)	± 50 mA
DC V_{CC} or Ground Current per Output Pin (I_{CC} or I_{GND})	± 50 mA
Storage Temperature (T_{STG})	−65°C to +150°C
Junction Temperature (T_J) (PDIP)	140°C

Recommended Operating Conditions

Supply Voltage (V_{CC})	
AC	2.0V to 6.0V
ACT	4.5V to 5.5V
Input Voltage (V_I)	0V to V_{CC}
Output Voltage (V_O)	0V to V_{CC}
Operating Temperature (T_A)	−40°C to +85°C
Minimum Input Edge Rate (ΔV/Δt)	
AC Devices	
V_{IN} from 30% to 70% of V_{CC}	
V_{CC} @ 3.3V, 4.5V, 5.5V for AC	125 mV/ns
Minimum Input Edge Rate (ΔV/Δt)	
ACT Devices	
V_{IN} from 0.8V to 2.0V	
V_{CC} @ 4.5V, 5.5V for ACT	125 mV/ns

Note 1: Absolute maximum ratings are those values beyond which damage to the device may occur. The databook specifications should be met, without exception, to ensure that the system design is reliable over its power supply, temperature, and output/input loading variables. Fairchild does not recommend operation of FACT™ circuits outside databook specifications.

DC Electrical Characteristics for AC

Symbol	Parameter	V_{CC} (V)	T_A = +25°C Typ	T_A = +25°C Guaranteed Limits	T_A = −40°C to +85°C Guaranteed Limits	Units	Conditions
V_{IH}	Minimum HIGH Level Input Voltage	3.0	1.5	2.1	2.1	V	V_{OUT} = 0.1V or V_{CC} − 0.1V
		4.5	2.25	3.15	3.15		
		5.5	2.75	3.85	3.85		
V_{IL}	Maximum LOW Level Input Voltage	3.0	1.5	0.9	0.9	V	V_{OUT} = 0.1V or V_{CC} − 0.1V
		4.5	2.25	1.35	1.35		
		5.5	2.75	1.65	1.65		
V_{OH}	Minimum HIGH Level Output Voltage	3.0	2.99	2.9	2.9	V	I_{OUT} = −50 μA
		4.5	4.49	4.4	4.4		
		5.5	5.49	5.4	5.4		
						V	$V_{IN} = V_{IL}$ or V_{IH}
		3.0		2.56	2.46		I_{OH} = −12 mA
		4.5		3.86	3.76		I_{OH} = −24 mA
		5.5		4.86	4.76		I_{OH} = −24 mA (Note 2)
V_{OL}	Maximum LOW Level Output Voltage	3.0	0.002	0.1	0.1	V	I_{OUT} = 50 μA
		4.5	0.001	0.1	0.1		
		5.5	0.001	0.1	0.1		
						V	$V_{IN} = V_{IL}$ or V_{IH}
		3.0		0.36	0.44		I_{OL} = 12 mA
		4.5		0.36	0.44		I_{OL} = 24 mA
		5.5		0.36	0.44		I_{OL} = 24 mA (Note 2)
I_{IN} (Note 4)	Maximum Input Leakage Current	5.5		±0.1	±1.0	μA	$V_I = V_{CC}$, GND
I_{OLD}	Minimum Dynamic Output Current (Note 3)	5.5			75	mA	V_{OLD} = 1.65V Max
I_{OHD}		5.5			−75	mA	V_{OHD} = 3.85V Min
I_{CC} (Note 4)	Maximum Quiescent Supply Current	5.5		4.0	40.0	μA	$V_{IN} = V_{CC}$ or GND

Note 2: All outputs loaded; thresholds on input associated with output under test.

Note 3: Maximum test duration 2.0 ms, one output loaded at a time.

Note 4: I_{IN} and I_{CC} @ 3.0V are guaranteed to be less than or equal to the respective limit @ 5.5V V_{CC}.

AC Electrical Characteristics for AC

Symbol	Parameter	V_{CC} (V) (Note 5)	$T_A = +25°C$, $C_L = 50$ pF Min	Typ	Max	$T_A = -40°C$ to $+85°C$, $C_L = 50$ pF Min	Max	Units
f_{MAX}	Maximum Clock Frequency	3.3	90	125		75		MHz
		5.0	140	175		125		
t_{PLH}	Propagation Delay Clock to Output	3.3	4.0	7.0	12.5	3.0	14.0	ns
		5.0	3.0	5.5	9.0	2.5	10.0	
t_{PHL}	Propagation Delay Clock to Output	3.3	4.0	7.0	13.0	3.5	14.5	ns
		5.0	3.0	5.0	10.0	2.5	11.0	
t_{PHL}	Propagation Delay $\overline{MR}$ to Output	3.3	4.0	7.0	13.0	3.5	14.0	ns
		5.0	3.0	5.0	10.0	2.5	10.5	

Note 5: Voltage Range 3.3 is 3.3V ± 0.3V
Voltage Range 5.0 is 5.0V ± 0.5V

AC Operating Requirements for AC

Symbol	Parameter	V_{CC} (V) (Note 6)	$T_A = +25°C$, $C_L = 50$ pF Typ	$T_A = -40°C$ to $+85°C$, $C_L = 50$ pF Guaranteed Minimum		Units
t_S	Setup Time, HIGH or LOW Data to CP	3.3	3.5	5.5	6.0	ns
		5.0	2.5	4.0	4.5	
t_H	Hold Time, HIGH or LOW Data to CP	3.3	−2.0	0	0	ns
		5.0	−1.0	1.0	1.0	
t_W	Clock Pulse Width HIGH or LOW	3.3	3.5	5.5	6.0	ns
		5.0	2.5	4.0	4.5	
t_W	$\overline{MR}$ Pulse Width HIGH or LOW	3.3	2.0	5.5	6.0	ns
		5.0	1.5	4.0	4.5	
t_{rec}	Recovery Time $\overline{MR}$ to CP	3.3	1.5	3.5	4.5	ns
		5.0	1.0	2.0	3.0	

Note 6: Voltage Range 3.3 is 3.3V ± 0.3V
Voltage Range 5.0 is 5.0V ± 0.5V

EEPW .com.cn

DC Electrical Characteristics for ACT

Symbol	Parameter	V_{CC} (V)	$T_A = +25°C$ Typ	$T_A = -40°C$ to $+85°C$ Guaranteed Limits		Units	Conditions
V_{IH}	Minimum HIGH Level Input Voltage	4.5	1.5	2.0	2.0	V	$V_{OUT} = 0.1V$ or $V_{CC} - 0.1V$
		5.5	1.5	2.0	2.0		
V_{IL}	Maximum LOW Level Input Voltage	4.5	1.5	0.8	0.8	V	$V_{OUT} = 0.1V$ or $V_{CC} - 0.1V$
		5.5	1.5	0.8	0.8		
V_{OH}	Minimum HIGH Level Output Voltage	4.5	4.49	4.4	4.4	V	$I_{OUT} = -50\ \mu A$
		5.5	5.49	5.4	5.4		
		4.5		3.86	3.76	V	$V_{IN} = V_{IL}$ or V_{IH}, $I_{OH} = -24$ mA
		5.5		4.86	4.76		$I_{OH} = -24$ mA (Note 7)
V_{OL}	Maximum LOW Level Output Voltage	4.5	0.001	0.1	0.1	V	$I_{OUT} = 50\ \mu A$
		5.5	0.001	0.1	0.1		
		4.5		0.36	0.44	V	$V_{IN} = V_{IL}$ or V_{IH}, $I_{OL} = 24$ mA
		5.5		0.36	0.44		$I_{OL} = 24$ mA (Note 7)
I_{IN}	Maximum Input Leakage Current	5.5		±0.1	±1.0	μA	$V_I = V_{CC}$, GND
I_{CCT}	Maximum I_{CC}/Input	5.5	0.6		1.5	mA	$V_I = V_{CC} - 2.1V$
I_{OLD}	Minimum Dynamic Output Current (Note 8)	5.5			75	mA	$V_{OLD} = 1.65V$ Max
I_{OHD}		5.5			−75	mA	$V_{OHD} = 3.85V$ Min
I_{CC}	Maximum Quiescent Supply Current	5.5		4.0	40.0	μA	$V_{IN} = V_{CC}$ or GND

Note 7: All outputs loaded; thresholds on input associated with output under test.

Note 8: Maximum test duration 2.0 ms, one output loaded at a time.

AC Electrical Characteristics for ACT

Symbol	Parameter	V_{CC} (V) (Note 9)	$T_A = +25°C$, $C_L = 50$ pF Min	Typ	Max	$T_A = -40°C$ to $+85°C$, $C_L = 50$ pF Min	Max	Units
f_{MAX}	Maximum Clock Frequency	2.0	125	189		110		MHz
t_{PLH} t_{PHL}	Propagation Delay CP to Q_n	5.0	1.5	6.5	8.5	1.5	9.0	ns
t_{PHL}	Propagation Delay $\overline{MR}$ to Q_n	5.0	1.5	7.0	9.0	1.5	8.5	ns

Note 9: Voltage Range 5.0 is 5.0V ± 0.5V

EEPW 電子產品世界 .com.cn

AC Operating Requirements for ACT

Symbol	Parameter	V_{CC} (V) (Note 10)	$T_A = +25°C$ $C_L = 50$ pF		$T_A = -40°C$ to $+85°C$ $C_L = 50$ pF	Units
			Typ	Guaranteed Minimum		
t_S	Setup Time, HIGH or LOW D_n to CP	5.0	1.0	3.5	3.5	ns
t_H	Hold Time, HIGH or LOW D_n to CP	5.0	–0.5	1.5	1.5	ns
t_W	Clock Pulse Width HIGH or LOW	5.0	2.0	4.0	4.0	ns
t_W	$\overline{MR}$ Pulse Width HIGH or LOW	5.0	1.5	4.0	4.0	ns
t_W	Recovery Time $\overline{MR}$ to CP	5.0	0.5	3.0	3.0	ns

Note 10: Voltage Range 5.0 is 5.0V ± 0.5V

Capacitance

Symbol	Parameter	Typ	Units	Conditions
C_{IN}	Input Capacitance	4.5	pF	V_{CC} = OPEN
C_{PD}	Power Dissipation Capacitance for AC Power Dissipation Capacitance for ACT	50.0 40.0	pF	V_{CC} = 5.0V

EEPW 电子产品世界 .com.cn

Physical Dimensions inches (millimeters) unless otherwise noted

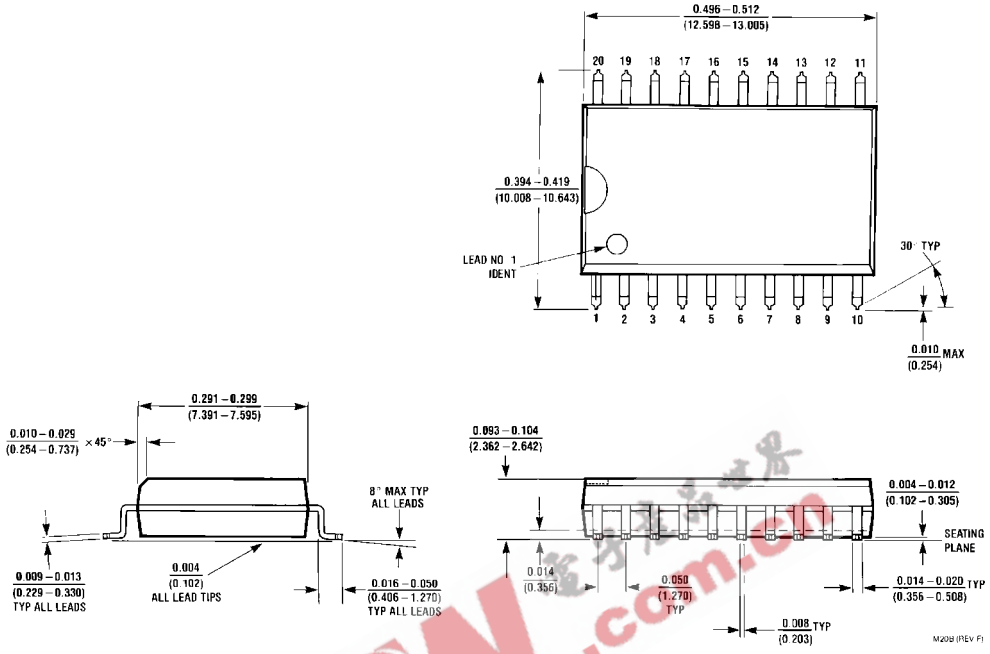

20-Lead Small Outline Integrated Circuit (SOIC), JEDEC MS-013, 0.300 Wide
Package Number M20B

Physical Dimensions inches (millimeters) unless otherwise noted (Continued)

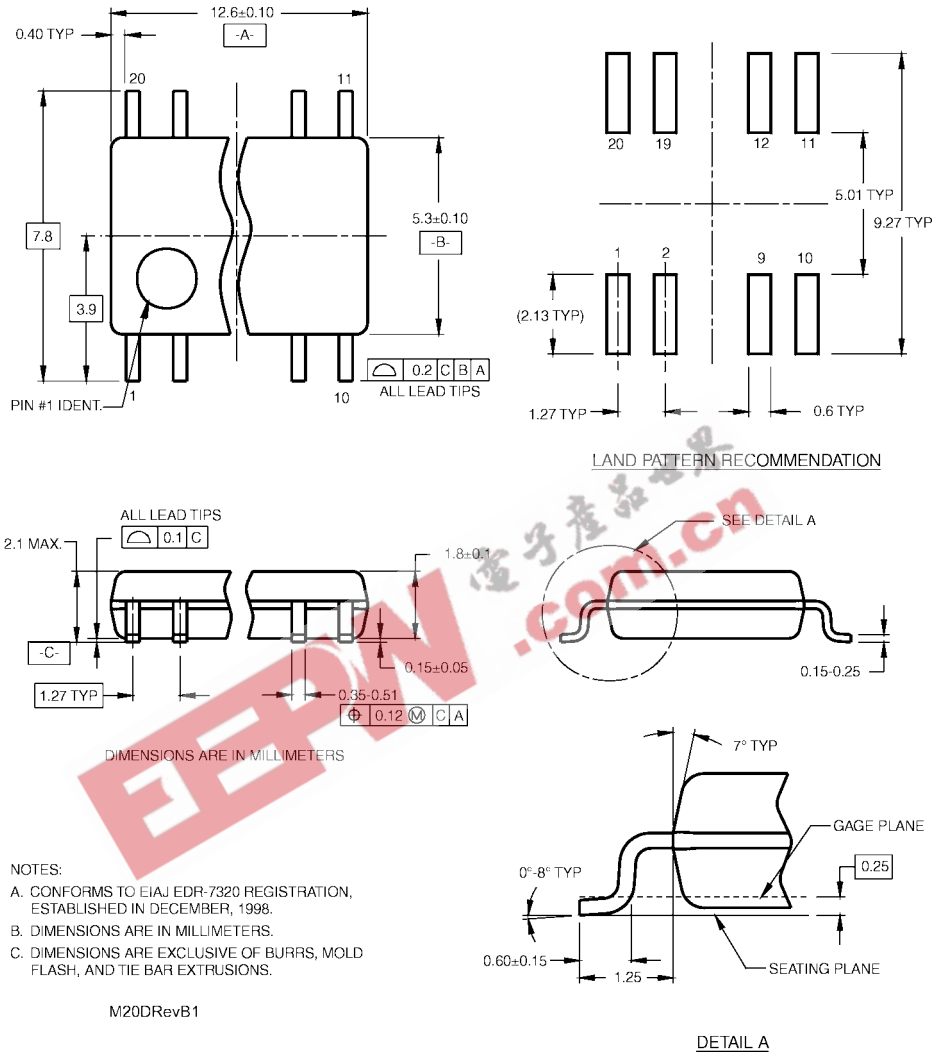

NOTES:

A. CONFORMS TO EIAJ EDR-7320 REGISTRATION, ESTABLISHED IN DECEMBER, 1998.

B. DIMENSIONS ARE IN MILLIMETERS.

C. DIMENSIONS ARE EXCLUSIVE OF BURRS, MOLD FLASH, AND TIE BAR EXTRUSIONS.

M20DRevB1

20-Lead Small Outline Package (SOP), EIAJ TYPE II, 5.3mm Wide
Package Number M20D

EEPW 電子產品世界 .com.cn

Physical Dimensions inches (millimeters) unless otherwise noted (Continued)

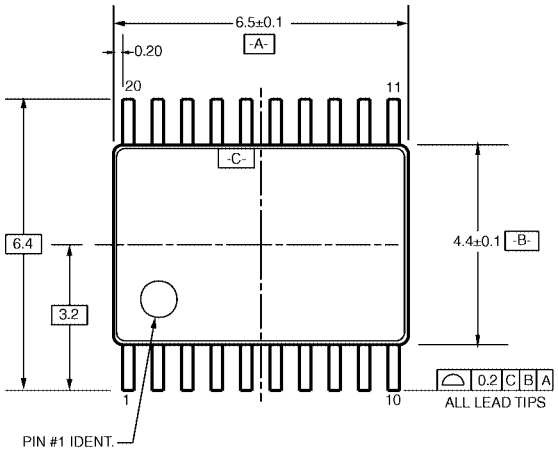

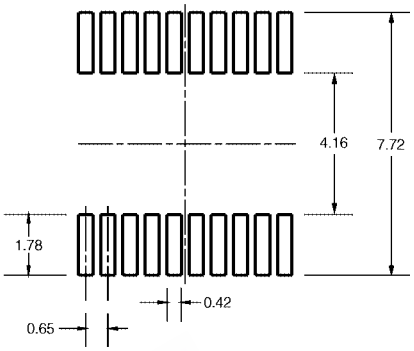

LAND PATTERN RECOMMENDATION

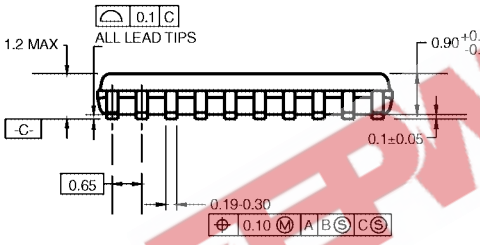

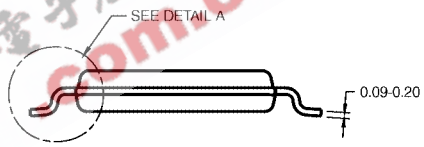

DIMENSIONS ARE IN MILLIMETERS

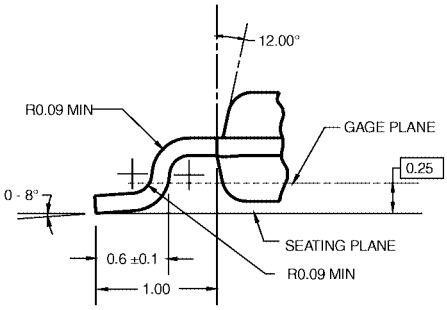

DETAIL A

NOTES:

A. CONFORMS TO JEDEC REGISTRATION MO-153, VARIATION AC, REF NOTE 6, DATE 7/93.

B. DIMENSIONS ARE IN MILLIMETERS.

C. DIMENSIONS ARE EXCLUSIVE OF BURRS, MOLD FLASH, AND TIE BAR EXTRUSIONS.

D. DIMENSIONS AND TOLERANCES PER ANSI Y14.5M, 1982.

MTC20RevD1

20-Lead Thin Shrink Small Outline Package (TSSOP), JEDEC MO-153, 4.4mm Wide
Package Number MTC20

EEPW 電子產品世界 .com.cn

Physical Dimensions inches (millimeters) unless otherwise noted (Continued)

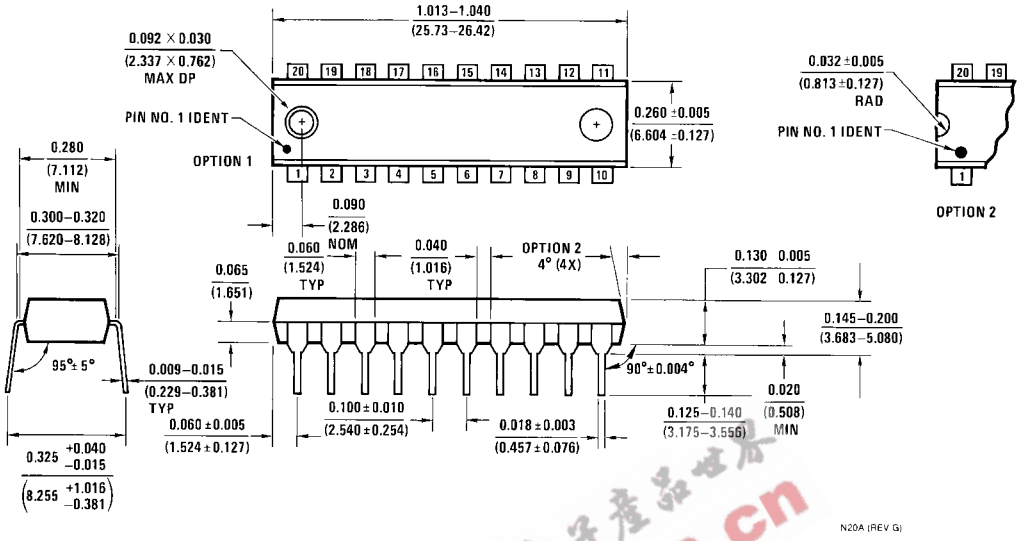

20-Lead Plastic Dual-In-Line Package (PDIP), JEDEC MS-001, 0.300 Wide
Package Number N20A

EEPW 電子產品世界 .com.cn

Fairchild does not assume any responsibility for use of any circuitry described, no circuit patent licenses are implied and Fairchild reserves the right at any time without notice to change said circuitry and specifications.

LIFE SUPPORT POLICY

FAIRCHILD'S PRODUCTS ARE NOT AUTHORIZED FOR USE AS CRITICAL COMPONENTS IN LIFE SUPPORT DEVICES OR SYSTEMS WITHOUT THE EXPRESS WRITTEN APPROVAL OF THE PRESIDENT OF FAIRCHILD SEMICONDUCTOR CORPORATION. As used herein:

1. Life support devices or systems are devices or systems which, (a) are intended for surgical implant into the body, or (b) support or sustain life, and (c) whose failure to perform when properly used in accordance with instructions for use provided in the labeling, can be reasonably expected to result in a significant injury to the user.
2. A critical component in any component of a life support device or system whose failure to perform can be reasonably expected to cause the failure of the life support device or system, or to affect its safety or effectiveness.

www.fairchildsemi.com