# A Series Crystal

- **HC-49/U Thru-Hole Crystal**
- **RoHS Compliant Available**
- **Wide Frequency Range**
- **AT Cut**
- **Resistance Weld**

## ELECTRICAL SPECIFICATIONS:

| | |
|---|---|
| Frequency Range | 1.8432MHz to 200.000MHz |
| Frequency Tolerance / Stability | (See Part Number Guide for Options) |
| Operating Temperature Range | (See Part Number Guide for Options) |
| Storage Temperature | -55°C to +125°C |
| Aging | ±5ppm / first year Max |
| Shunt Capacitance | 7pF Max |
| Load Capacitance | 20pF Standard<br>(See Part Number Guide for Options) |
| Equivalent Series Resistance | See ESR Chart |
| Mode of Operation | Fundamental, 3rd OT or 5th OT |
| Drive Level | 2mW Max |
| Shock | MIL-STD-883, Meth 2002, Cond B |
| Solderability | MIL-STD-883, Meth 2003 |
| Solvent Resistance | MIL-STD-202, Meth 215 |
| Vibration | MIL-STD-883, Meth 2007, Cond A |
| Gross Leak Test | MIL-STD-883, Meth 1014, Cond C |
| Fine Leak Test | MIL-STD-883, Meth 1014, Cond A |

## ESR CHART:

| Frequency Range | ESR (Ohms) | Mode / Cut |
|---|---|---|
| 1.8432MHz to 1.999MHz | 800 Max | Fund / AT |
| 2.000MHz to 2.399MHz | 550 Max | Fund / AT |
| 2.400MHz to 2.999MHz | 350 Max | Fund / AT |
| 3.000MHz to 3.199MHz | 250 Max | Fund / AT |
| 3.200MHz to 3.499MHz | 200 Max | Fund / AT |
| 3.500MHz to 3.599MHz | 150 Max | Fund / AT |
| 3.600MHz to 3.999MHz | 120 Max | Fund / AT |
| 4.000MHz to 4.999MHz | 100 Max | Fund / AT |
| 5.000MHz to 5.999MHz | 70 Max | Fund / AT |
| 6.000MHz to 40.000MHz | 40 Max | Fund / AT |
| 24.000MHz to 75.000MHz | 40 Max | 3rd OT / AT |
| 75.001MHz to 200.000MHz | 100 Max | 5th OT /AT |

## MECHANICAL DETAIL:

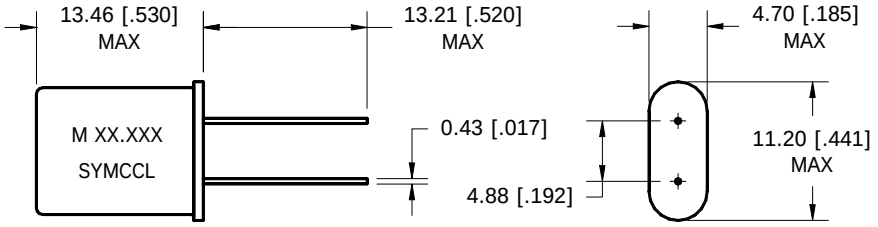


DIMENSIONS IN BRACKETS ARE IN INCHES

## MARKING:

Line 1: MXX.XXX
XX.XXX = Frequency in MHz

Line 2: SYMCCL
S = Internal Code
YM = Date Code (Year/Month)
CC = Crystal Parameters Code
L = Denotes RoHS Compliant

## PART NUMBER GUIDE:

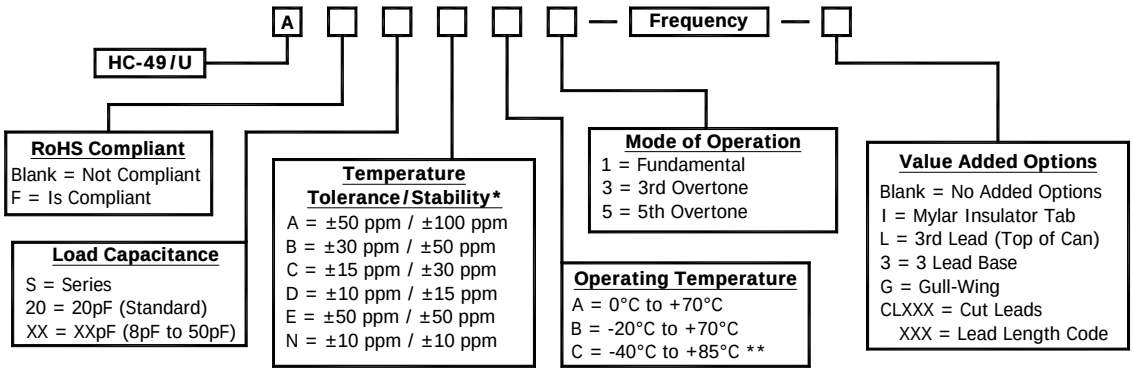


* Please consult with MMD sales department for any other parameters or options.
** Not all Frequency Tolerance/Stability options available at this temperature range.

**MMD Components**, 30400 Esperanza, Rancho Santa Margarita, CA, 92688
Phone: (949) 709-5075, Fax: (949) 709-3536, www.mmdcomp.com
Sales@mmdcomp.com