A Series Crystal

- **HC-49/U Thru-Hole Crystal**
- **RoHS Compliant Available**
- **Wide Frequency Range**
- **AT Cut**
- **Resistance Weld**

ELECTRICAL SPECIFICATIONS:

Frequency Range	1.8432MHz to 200.000MHz
Frequency Tolerance / Stability	(See Part Number Guide for Options)
Operating Temperature Range	(See Part Number Guide for Options)
Storage Temperature	-55°C to +125°C
Aging	±5ppm / first year Max
Shunt Capacitance	7pF Max
Load Capacitance	20pF Standard (See Part Number Guide for Options)
Equivalent Series Resistance	See ESR Chart
Mode of Operation	Fundamental, 3rd OT or 5th OT
Drive Level	2mW Max
Shock	MIL-STD-883, Meth 2002, Cond B
Solderability	MIL-STD-883, Meth 2003
Solvent Resistance	MIL-STD-202, Meth 215
Vibration	MIL-STD-883, Meth 2007, Cond A
Gross Leak Test	MIL-STD-883, Meth 1014, Cond C
Fine Leak Test	MIL-STD-883, Meth 1014, Cond A

ESR CHART:

Frequency Range	ESR (Ohms)	Mode / Cut
1.8432MHz to 1.999MHz	800 Max	Fund / AT
2.000MHz to 2.399MHz	550 Max	Fund / AT
2.400MHz to 2.999MHz	350 Max	Fund / AT
3.000MHz to 3.199MHz	250 Max	Fund / AT
3.200MHz to 3.499MHz	200 Max	Fund / AT
3.500MHz to 3.599MHz	150 Max	Fund / AT
3.600MHz to 3.999MHz	120 Max	Fund / AT
4.000MHz to 4.999MHz	100 Max	Fund / AT
5.000MHz to 5.999MHz	70 Max	Fund / AT
6.000MHz to 40.000MHz	40 Max	Fund / AT
24.000MHz to 75.000MHz	40 Max	3rd OT / AT
75.001MHz to 200.000MHz	100 Max	5th OT /AT

MECHANICAL DETAIL:

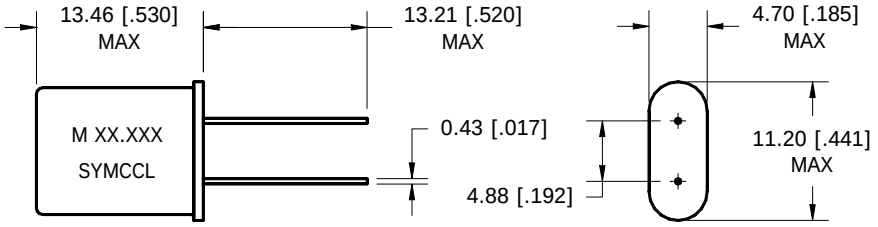

DIMENSIONS IN BRACKETS ARE IN INCHES

MARKING:

Line 1: MXX.XXX
XX.XXX = Frequency in MHz

Line 2: SYMCCL
S = Internal Code
YM = Date Code (Year/Month)
CC = Crystal Parameters Code
L = Denotes RoHS Compliant

PART NUMBER GUIDE:

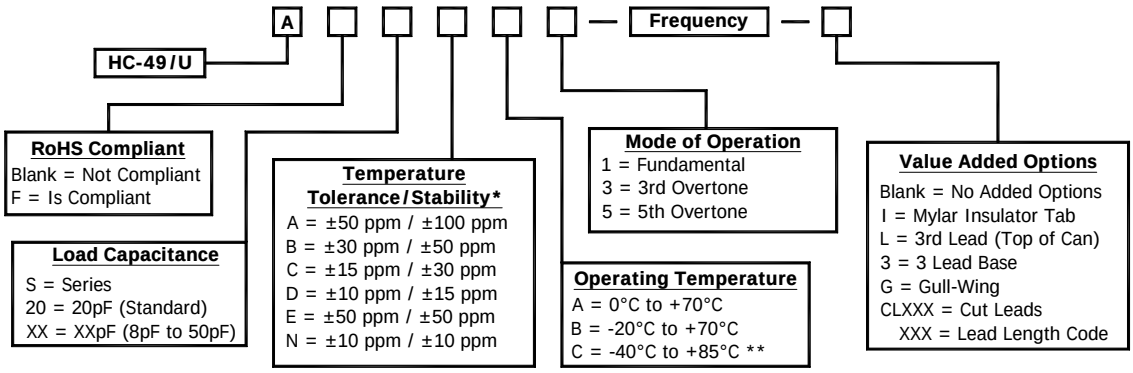

* Please consult with MMD sales department for any other parameters or options.
** Not all Frequency Tolerance/Stability options available at this temperature range.

MMD Components, 30400 Esperanza, Rancho Santa Margarita, CA, 92688
Phone: (949) 709-5075, Fax: (949) 709-3536, www.mmdcomp.com
Sales@mmdcomp.com