Model X0060L7575A00

Rev C

Ultra Low Profile 0603 RF Crossover

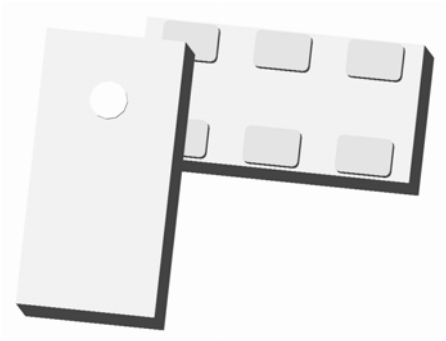

Description

The (patent pending) X0066L7575A00 is an ultra-small low profile crossover that enables the transition of two intersecting RF traces in an easy to use industry standard SMT package. The 0603 crossover is ideal for any critical applications where layout and available space are a premium and resorting to addition PWB layers and larger overall footprints are unacceptable. With low insertion loss and high isolation packaged with cost in mind, this novel component delivers.

Detailed Electrical Specifications*: Specifications subject to change without notice.

Features:

- **0 – 2500 MHz.**
- **0.7mm Height Profile**
- **75 Ohm RF-RF Crossover**
- **All Wireless Frequencies**
- **Low Insertion Loss**
- **High Isolation**
- **Surface Mountable**
- **Tape & Reel**
- **Non-conductive Surface**
- **RoHS Compliant**

	ROOM (25°C)			
Parameter	**Min.**	**Typ.**	**Max**	**Unit**
Frequency	0		2500	MHz
Port Impedance		75		Ω
Return Loss	19	21		dB
Insertion Loss		0.1	0.15	dB
Isolation (cross-talk)				
0 – 700 MHz	44	52		dB
700 - 1700 MHz	40	47		dB
1700 - 2500 MHz	38	43		dB
Power Handling			2	Watts
Operating Temperature	-55		+85	ºC

Outline Drawing

Top View (Near-side) Side View Bottom View (Far-side)

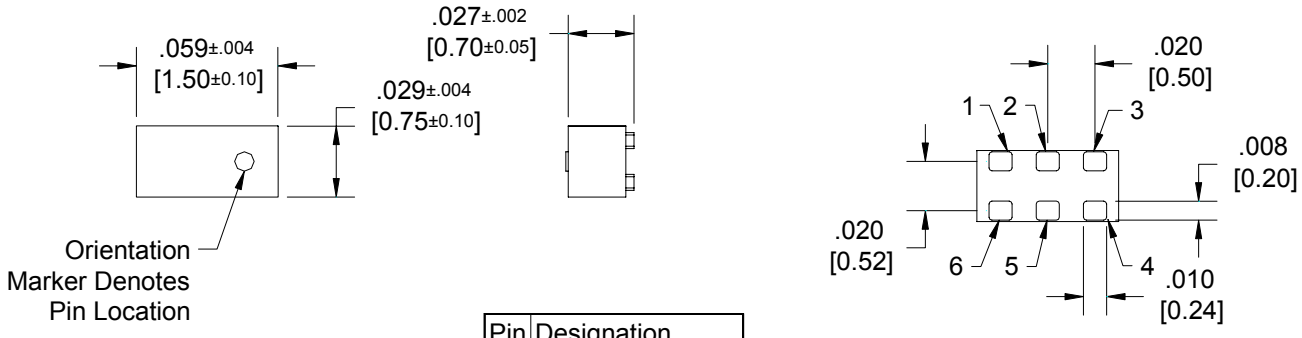

Pin	Designation
1	GND
2	RF 2 In/Out
3	GND
4	RF 1 In/Out
5	RF 2 In/Out
6	RF 1 In/Out

Dimensions are in Inches [Millimeters]
Mechanical Outline

Tolerances are Non-Cumulative

Available on Tape and Reel for Pick and Place Manufacturing.

USA/Canada: (315) 432-8909
Toll Free: (800) 411-6596
Europe: +44 2392-232392

Typical Broadband Performance: 0 GHz. to 3.0 GHz.

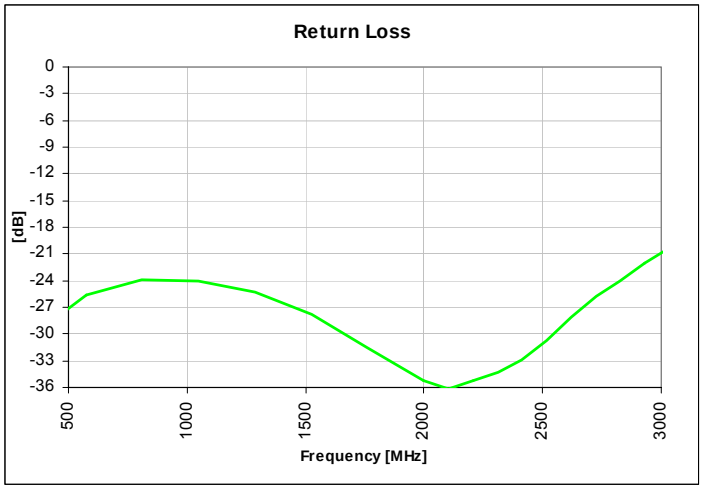

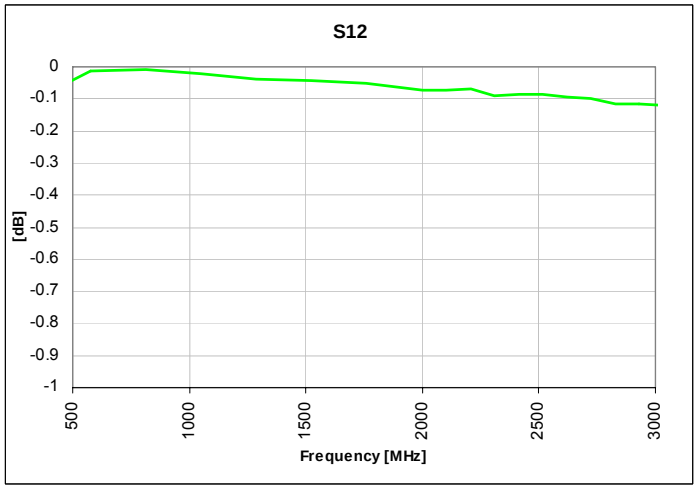

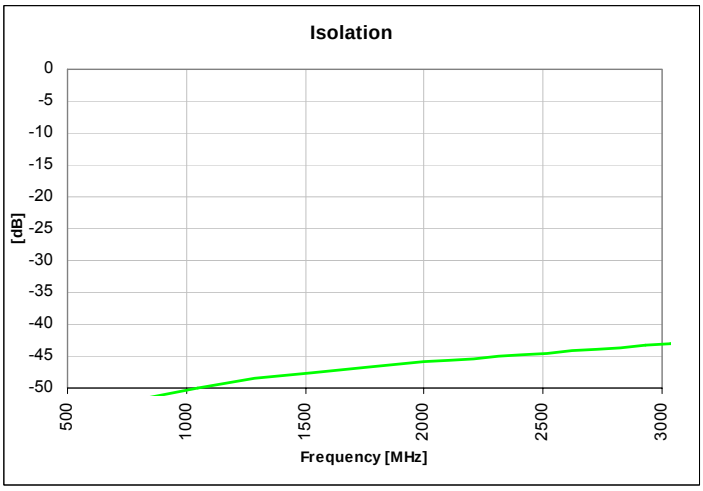

USA/Canada: (315) 432-8909
Toll Free: (800) 411-6596
Europe: +44 2392-232392

Available on Tape and Reel for Pick and Place Manufacturing.

Mounting Configuration:

In order for Xinger surface mount components to work optimally, the proper impedance transmission lines must be used to connect to the RF ports. If this condition is not satisfied, insertion loss, Isolation and VSWR may not meet published specifications.

All of the Xinger components are constructed from ceramic filled PTFE composites which possess excellent electrical and mechanical stability having X and Y thermal coefficient of expansion (CTE) of 17 ppm/^{o}C.

An example of the PCB footprint used in the testing of these parts is shown on below. In specific designs, the transmission line widths need to be adjusted to the unique dielectric coefficients and thicknesses as well as varying pick and place equipment tolerances.

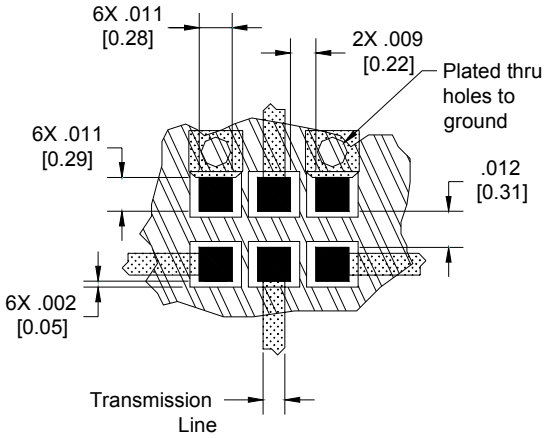

Part Orientation (Top View)

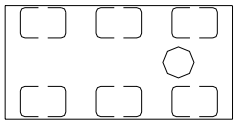

Circuit Pattern

Footprint Pad (s)

Solder Resist

Dimensions are in Inches [Millimeters]
Mounting Footprint

Available on Tape and Reel for Pick and Place Manufacturing.

USA/Canada: (315) 432-8909
Toll Free: (800) 411-6596
Europe: +44 2392-232392

Packaging and Ordering Information

Parts are available in reel and are packaged per EIA 481-2. Parts are oriented in tape and reel as shown below. Minimum order quantities are 4000 per reel. See Model Numbers below for further ordering information.

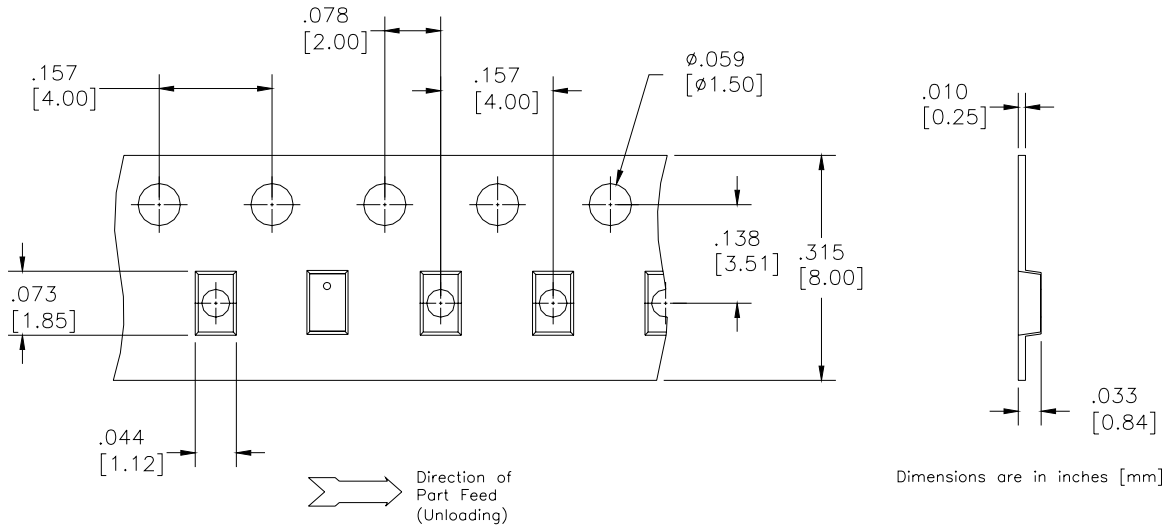

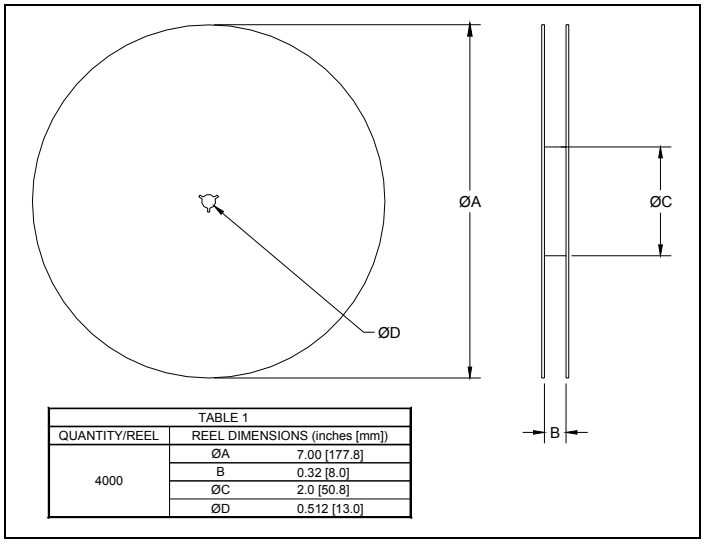

TABLE 1		
QUANTITY/REEL	REEL DIMENSIONS (inches [mm])	
4000	ØA	7.00 [177.8]
	B	0.32 [8.0]
	ØC	2.0 [50.8]
	ØD	0.512 [13.0]

BD 2425 J 50 100 A 00

Function	Frequency	Package Dimensions	Unbalanced Impedance	Balanced Impedance + Coupling	Plating Finish	Codes
B = Balun BD = Balun + DC F = Filter FB = Filter / Balun C = 3dB Coupler DC = Directional J = RF Jumper X = RF cross over	0110 = 100 – 1000 MHz 0810 = 800 – 1000 MHz 0922 = 950 – 2150 MHz 0826 = 800 – 6200 MHz 1222 = 1200 – 2200 MHz 1416 = 1400 – 1600 MHz 1722 = 1700 – 2200 MHz 2326 = 2300 – 2600 MHz 2425 = 2400 – 2500 MHz 3150 = 3100 – 5000 MHz 3436 = 3400 – 3600 MHz 4859 = 4800 – 5900MHz 5153 = 5100 – 5300 MHz 5159 = 5100 – 5900 MHz 5759 = 5700 – 5900 MHz	A = 150 x 150 mils (4mm x 4mm) C = 120 x 120 mils (3mm x 3mm) E = 100 x 80 mils (2.5mm x 2mm) J = 80 x 50 mils (2mm x 1.25mm) L = 60 x 30 mils (1.5mm x 0.75mm) N = 40 x 40 mils (1mm x 1mm)	50 = 50 Ohm 75 = 75 Ohm	25 = 25 Ω Balanced 30 = 30 Ω Balanced 50 = 50 Ω Balanced 75 = 75 Ω Balanced 100 = 100 Ω Balanced 150 = 150 Ω Balanced 200 = 200 Ω Balanced 300 = 300 Ω Balanced 400 = 400 Ω Balanced 03 = 3dB Hybrid 10 = 10dB Directional 20 = 20dB Directional	A = Gold P = Tin-Lead	

Available on Tape and Reel for Pick and Place Manufacturing.

USA/Canada: (315) 432-8909
Toll Free: (800) 411-6596
Europe: +44 2392-232392