SOT23 NPN SILICON PLANAR SMALL SIGNAL TRANSISTOR

BCX70

ISSUE 2 – FEBRUARY 95

PARTMARKING DETAIL – BCX70G – AG
BCX70H – AH
BCX70J – AJ
BCX70K – AK
BCX70GR – AW
BCX70HR – 9P
BCX70JR – AX
BCX70KR – P9

COMPLEMENTARY TYPE – BCX71

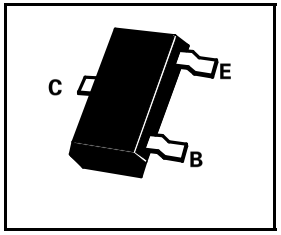

ABSOLUTE MAXIMUM RATINGS.

PARAMETER	SYMBOL	VALUE	UNIT
Collector-Emitter Voltage	V_{CES}	45	V
Collector-Emitter Voltage	V_{CEO}	45	V
Emitter-Base Voltage	V_{EBO}	5	V
Continuous Collector Current	I_C	200	mA
Base Current	I_B	50	mA
Power Dissipation at T_{amb}=25°C	P_{TOT}	330	mW
Operating and Storage Temperature Range	tj:tstg	-55 to +150	°C

ELECTRICAL CHARACTERISTICS (at T_{amb} = 25°C unless otherwise stated).

PARAMETER		SYMBOL	MIN.	TYP.	MAX.	UNIT	CONDITIONS.
Collector-Emitter Breakdown Voltage		$V_{(BR)CEO}$	45			V	I_C=2mA
Emitter-Base Breakdown Voltage		$V_{(BR)EBO}$	5			V	I_{EBO}=1µA
Collector-Emitter Cut-off Current		I_{CES}			20 20	nA µA	V_{CES}=45V V_{CES}=45V, T_{amb}=150oC
Emitter-Base Cut-Off Current		I_{EBO}			20	nA	V_{EBO}=4V
Collector-Emitter Saturation Voltage		$V_{CE(sat)}$		0.12 0.20	0.35 0.55	V V	I_C=10mA, I_B= 0.25mA I_C= 50mA, I_B=1.25mA
Base-Emitter Saturation Voltage		$V_{BE(SAT)}$	0.60 0.70	0.70 0.83	0.85 1.05	V V	I_C=10mA, I_B=0.25mA, I_C=50mA, I_B=1.25mA
Base - Emitter Voltage		V_{BE}	0.55	0.52 0.65 0.78	0.75	V V V	I_C=10µA, V_{CE}=5V I_C=2mA, V_{CE}=5V I_C=50mA, V_{CE}=1V
Static Forward Current Transfer Ratio	BCX70G	h_{FE}	120 50	78 170	220		I_C=10µA, V_{CE}=5V I_C=2mA, V_{CE}=5V I_C=50mA, V_{CE}=1V
	BCX70H	h_{FE}	20 180 70	145 250	310		I_C=10µA, V_{CE}=5V I_C=2mA, V_{CE}=5V I_C=50mA, V_{CE}=1V
	BCX70J	h_{FE}	40 250 90	220 350	460		I_C=10µA, V_{CE}=5V I_C=2mA, V_{CE}=5V I_C=50mA, V_{CE}=1V
	BCX70K	h_{FE}	100 380 100	300 500	630		I_C=10µA, V_{CE}=5V I_C=2mA, V_{CE}=5V I_C=50mA, V_{CE}=1V
Transition Frequency		f_T	125	250		MHz	I_C=10mA, V_{CE}=5V f = 100MHz
Emitter-Base Capacitance		C_{ebo}		8		pF	V_{EBO}=0.5V, f =1MHz
Collector-Base Capacitance		C_{cbo}			4.5	pF	V_{CBO}=10V, f =1MHz
Noise Figure		N		2	6	dB	I_C= 0.2mA, V_{CE}= 5V R_G =2KΩ, f=1KH Δf=200Hz
Switching times: Delay Time Rise Time Turn-on Time Storage Time Fall Time Turn-Off Time		 t_d t_r t_{on} t_s t_f t_{off}		 35 50 85 400 80 480	 150 800	 ns ns ns ns ns ns	I_C:I_{B1}:- I_{B2} =10:1:1mA R_1=5KΩ, R_2=5KΩ V_{BB} =3.6V, R_L=990Ω

*Measured under pulsed conditions. Pulse width=300µs. Duty cycle
Spice parameter data is available upon request for this device

FOUR TERMINAL NETWORK DATA (I_C=2mA, V_{CE}=5V, f=1kHz)

	h_{FE} Group G			h_{FE} Group H			h_{FE} Group J			h_{FE} Group K			
	Min.	Typ.	Max.	Min.	Typ.	Max.	Min.	Typ.	Max.	Min.	Typ.	Max.	
h_{11e}	1.6	2.7	4.5	2.5	3.6	6.0	3.2	4.5	8.5	4.5	7.5	12	kΩ
h_{12e}		1.5			2			2			3		10^{-4}
h_{21e}		200			260			330			520		
h_{22e}		18	30		24	50		30	60		50	100	µS

SWITCHING CIRCUIT

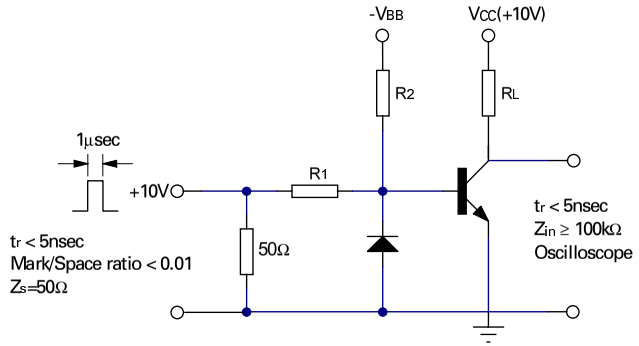

SOT23 NPN SILICON PLANAR SMALL SIGNAL TRANSISTOR

BCX70

ISSUE 2 – FEBRUARY 95

PARTMARKING DETAIL – BCX70G – AG
BCX70H – AH
BCX70J – AJ
BCX70K – AK
BCX70GR – AW
BCX70HR – 9P
BCX70JR – AX
BCX70KR – P9

COMPLEMENTARY TYPE – BCX71

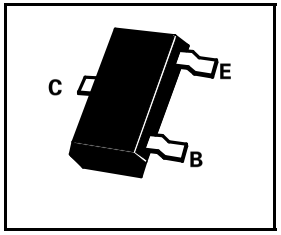

ABSOLUTE MAXIMUM RATINGS.

PARAMETER	SYMBOL	VALUE	UNIT
Collector-Emitter Voltage	V_{CES}	45	V
Collector-Emitter Voltage	V_{CEO}	45	V
Emitter-Base Voltage	V_{EBO}	5	V
Continuous Collector Current	I_C	200	mA
Base Current	I_B	50	mA
Power Dissipation at T_{amb}=25°C	P_{TOT}	330	mW
Operating and Storage Temperature Range	tj:tstg	-55 to +150	°C

ELECTRICAL CHARACTERISTICS (at T_{amb} = 25°C unless otherwise stated).

PARAMETER		SYMBOL	MIN.	TYP.	MAX.	UNIT	CONDITIONS.
Collector-Emitter Breakdown Voltage		$V_{(BR)CEO}$	45			V	I_C=2mA
Emitter-Base Breakdown Voltage		$V_{(BR)EBO}$	5			V	I_{EBO}=1µA
Collector-Emitter Cut-off Current		I_{CES}			20 20	nA µA	V_{CES}=45V V_{CES}=45V, T_{amb}=150oC
Emitter-Base Cut-Off Current		I_{EBO}			20	nA	V_{EBO}=4V
Collector-Emitter Saturation Voltage		$V_{CE(sat)}$		0.12 0.20	0.35 0.55	V V	I_C=10mA, I_B= 0.25mA I_C= 50mA, I_B=1.25mA
Base-Emitter Saturation Voltage		$V_{BE(SAT)}$	0.60 0.70	0.70 0.83	0.85 1.05	V V	I_C=10mA, I_B=0.25mA, I_C=50mA, I_B=1.25mA
Base - Emitter Voltage		V_{BE}	0.55	0.52 0.65 0.78	0.75	V V V	I_C=10µA, V_{CE}=5V I_C=2mA, V_{CE}=5V I_C=50mA, V_{CE}=1V
Static Forward Current Transfer Ratio	BCX70G	h_{FE}	120 50	78 170	220		I_C=10µA, V_{CE}=5V I_C=2mA, V_{CE}=5V I_C=50mA, V_{CE}=1V
	BCX70H	h_{FE}	20 180 70	145 250	310		I_C=10µA, V_{CE}=5V I_C=2mA, V_{CE}=5V I_C=50mA, V_{CE}=1V
	BCX70J	h_{FE}	40 250 90	220 350	460		I_C=10µA, V_{CE}=5V I_C=2mA, V_{CE}=5V I_C=50mA, V_{CE}=1V
	BCX70K	h_{FE}	100 380 100	300 500	630		I_C=10µA, V_{CE}=5V I_C=2mA, V_{CE}=5V I_C=50mA, V_{CE}=1V
Transition Frequency		f_T	125	250		MHz	I_C=10mA, V_{CE}=5V f = 100MHz
Emitter-Base Capacitance		C_{ebo}		8		pF	V_{EBO}=0.5V, f =1MHz
Collector-Base Capacitance		C_{cbo}			4.5	pF	V_{CBO}=10V, f =1MHz
Noise Figure		N		2	6	dB	I_C= 0.2mA, V_{CE}= 5V R_G =2KΩ, f=1KH Δf=200Hz
Switching times: Delay Time Rise Time Turn-on Time Storage Time Fall Time Turn-Off Time		 t_d t_r t_{on} t_s t_f t_{off}		 35 50 85 400 80 480	 150 800	 ns ns ns ns ns ns	I_C:I_{B1}:- I_{B2} =10:1:1mA R_1=5KΩ, R_2=5KΩ V_{BB} =3.6V, R_L=990Ω

*Measured under pulsed conditions. Pulse width=300µs. Duty cycle
Spice parameter data is available upon request for this device

FOUR TERMINAL NETWORK DATA (I_C=2mA, V_{CE}=5V, f=1kHz)

	h_{FE} Group G			h_{FE} Group H			h_{FE} Group J			h_{FE} Group K			
	Min.	Typ.	Max.	Min.	Typ.	Max.	Min.	Typ.	Max.	Min.	Typ.	Max.	
h_{11e}	1.6	2.7	4.5	2.5	3.6	6.0	3.2	4.5	8.5	4.5	7.5	12	kΩ
h_{12e}		1.5			2			2			3		10^{-4}
h_{21e}		200			260			330			520		
h_{22e}		18	30		24	50		30	60		50	100	µS
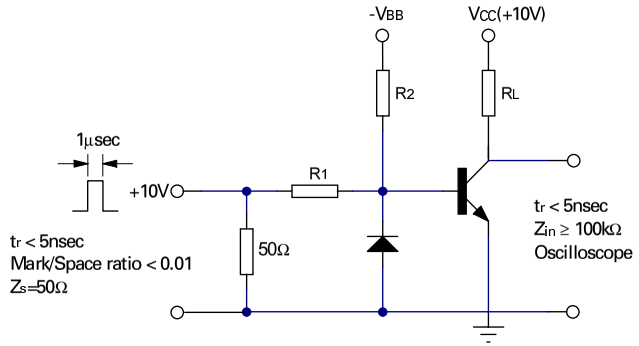
SWITCHING CIRCUIT