Data Sheet
June 1999

microelectronics group

Lucent Technologies
Bell Labs Innovations

ORCA® Series 2 Field-Programmable Gate Arrays

Features

- High-performance, cost-effective, low-power 0.35 µm CMOS technology (OR2CxxA), 0.3 µm CMOS technology (OR2TxxA), and 0.25 µm CMOS technology (OR2TxxB), (four-input look-up table (LUT) delay less than 1.0 ns with -8 speed grade)
- High density (up to 43,200 usable, logic-only gates; or 99,400 gates including RAM)
- Up to 480 user I/Os (OR2TxxA and OR2TxxB I/Os are 5 V tolerant to allow interconnection to both 3.3 V and 5 V devices, selectable on a per-pin basis)
- Four 16-bit look-up tables and four latches/flip-flops per PFU, nibble-oriented for implementing 4-, 8-, 16-, and/or 32-bit (or wider) bus structures
- Eight 3-state buffers per PFU for on-chip bus structures
- Fast, on-chip user SRAM has features to simplify RAM design and increase RAM speed:
  — Asynchronous single port: 64 bits/PFU
  — Synchronous single port: 64 bits/PFU
  — Synchronous dual port: 32 bits/PFU
- Improved ability to combine PFUs to create larger RAM structures using write-port enable and 3-state buffers
- Fast, dense multipliers can be created with the multiplier mode (4 x 1 multiplier/PFU):
  — 8 x 8 multiplier requires only 16 PFUs
  — 30% increase in speed
- Flip-flop/latch options to allow programmable priority of synchronous set/reset vs. clock enable
- Enhanced cascadable nibble-wide data path capabilities for adders, subtractors, counters, multipliers, and comparators including internal fast-carry operation
- Innovative, abundant, and hierarchical nibble-oriented routing resources that allow automatic use of internal gates for all device densities without sacrificing performance
- Upward bit stream compatible with the *ORCA* ATT2Cxx/ATT2Txx series of devices
- Pinout-compatible with new *ORCA* Series 3 FPGAs
- TTL or CMOS input levels programmable per pin for the OR2CxxA (5 V) devices
- Individually programmable drive capability:
  12 mA sink/6 mA source or 6 mA sink/3 mA source
- Built-in boundary scan (*IEEE**1149.1 JTAG) and 3-state all I/O pins, (TS_ALL) testability functions
- Multiple configuration options, including simple, low pin-count serial ROMs, and peripheral or JTAG modes for in-system programming (ISP)
- Full PCI bus compliance for all devices
- Supported by industry-standard CAE tools for design entry, synthesis, and simulation with *ORCA* Foundry Development System support (for back-end implementation)
- New, added features (OR2TxxB) have:
  — More I/O per package than the OR2TxxA family
  — No dedicated 5 V supply ($V_{DD}5$)
  — Faster configuration speed (40 MHz)
  — Pin selectable I/O clamping diodes provide 5V or 3.3V PCI compliance and 5V tolerance
  — Full PCI bus compliance in both 5V and 3.3V PCI systems

* *IEEE* is a registered trademark of The Institute of Electrical and Electronics Engineers, Inc.

Table 1. *ORCA* Series 2 FPGAs

Device	Usable Gates*	# LUTs	Registers	Max User RAM Bits	User I/Os	Array Size
OR2C04A/OR2T04A	4,800—11,000	400	400	6,400	160	10 x 10
OR2C06A/OR2T06A	6,900—15,900	576	576	9,216	192	12 x 12
OR2C08A/OR2T08A	9,400—21,600	784	724	12,544	224	14 x 14
OR2C10A/OR2T10A	12,300—28,300	1024	1024	16,384	256	16 x 16
OR2C12A/OR2T12A	15,600—35,800	1296	1296	20,736	288	18 x 18
OR2C15A/OR2T15A/OR2T15B	19,200—44,200	1600	1600	25,600	320	20 x 20
OR2C26A/OR2T26A	27,600—63,600	2304	2304	36,864	384	24 x 24
OR2C40A/OR2T40A/OR2T40B	43,200—99,400	3600	3600	57,600	480	30 x 30

* The first number in the usable gates column assumes 48 gates per PFU (12 gates per four-input LUT/FF pair) for logic-only designs. The second number assumes 30% of a design is RAM. PFUs used as RAM are counted at four gates per bit, with each PFU capable of implementing a 16 x 4 RAM (or 256 gates) per PFU.

Table of Contents

Contents	Page
Features	1
Description	3
ORCA Foundry Development System Overview	5
Architecture	5
Programmable Logic Cells	5
Programmable Function Unit	5
Look-Up Table Operating Modes	7
Latches/Flip-Flops	15
PLC Routing Resources	17
PLC Architectural Description	22
Programmable Input/Output Cells	25
Inputs	25
Outputs	26
5 V Tolerant I/O (OR2TxxB)	27
PCI Compliant I/O	27
PIC Routing Resources	28
PIC Architectural Description	29
PLC-PIC Routing Resources	30
Interquad Routing	32
Subquad Routing (OR2C40A/OR2T40A Only)	34
PIC Interquad (MID) Routing	36
Programmable Corner Cells	37
Programmable Routing	37
Special-Purpose Functions	37
Clock Distribution Network	37
Primary Clock	37
Secondary Clock	38
Selecting Clock Input Pins	39
FPGA States of Operation	40
Initialization	40
Configuration	41
Start-Up	42
Reconfiguration	42
Partial Reconfiguration	43
Other Configuration Options	43
Configuration Data Format	43
Using *ORCA* Foundry to Generate Configuration RAM Data	44
Configuration Data Frame	44
Bit Stream Error Checking	47
FPGA Configuration Modes	47
Master Parallel Mode	47
Master Serial Mode	48
Asynchronous Peripheral Mode	49
Synchronous Peripheral Mode	49
Slave Serial Mode	50
Slave Parallel Mode	50
Daisy Chain	51
Special Function Blocks	52
Single Function Blocks	52
Boundary Scan	54
Boundary-Scan Instructions	55
ORCA Boundary-Scan Circuitry	56
ORCA Timing Characteristics	60
Estimating Power Dissipation	61
OR2CxxA	61
OR2TxxA	63
OR2T15B and OR2T40B	65
Pin Information	66
Pin Descriptions	66
Package Compatibility	68
Compatibility with Series 3 FPGAs	70
Package Thermal Characteristics	126
QJA	126
yJC	126
QJC	126
QJB	126
Package Coplanarity	127
Package Parasitics	127
Absolute Maximum Ratings	129
Recommended Operating Conditions	129
Electrical Characteristics	130
Timing Characteristics	132
Series 2	160
Measurement Conditions	169
Output Buffer Characteristics	170
OR2CxxA	170
OR2TxxA	171
OR2TxxB	172
Package Outline Drawings	173
Terms and Definitions	173
84-Pin PLCC	174
100-Pin TQFP	175
144-Pin TQFP	176
160-Pin QFP	177
208-Pin SQFP	178
208-Pin SQFP2	179
240-Pin SQFP	180
240-Pin SQFP2	181
256-Pin PBGA	182
304-Pin SQFP	183
304-Pin SQFP2	184
352-Pin PBGA	185
432-Pin EBGA	186
Ordering Information	187
Index	189

EEPW .com.cn

Description

The *ORCA* Series 2 series of SRAM-based FPGAs are an enhanced version of the ATT2C/2T architecture. The latest *ORCA* series includes patented architectural enhancements that make functions faster and easier to design while conserving the use of PLCs and routing resources.

The Series 2 devices can be used as drop-in replacements for the ATT2Cxx/ATT2Txx series, respectively, and they are also bit stream compatible with each other. The usable gate counts associated with each series are provided in Table 1. Both series are offered in a variety of packages, speed grades, and temperature ranges.

The *ORCA* series FPGA consists of two basic elements: programmable logic cells (PLCs) and programmable input/output cells (PICs). An array of PLCs is surrounded by PICs as shown in Figure 1. Each PLC contains a programmable function unit (PFU). The PLCs and PICs also contain routing resources and configuration RAM. All logic is done in the PFU. Each PFU contains four 16-bit look-up tables (LUTs) and four latches/flip-flops (FFs).

The PLC architecture provides a balanced mix of logic and routing that allows a higher utilized gate/PFU than alternative architectures. The routing resources carry logic signals between PFUs and I/O pads. The routing in the PLC is symmetrical about the horizontal and vertical axes. This improves routability by allowing a bus of signals to be routed into the PLC from any direction.

Some examples of the resources required and the performance that can be achieved using these devices are represented in Table 2.

Table 2. *ORCA* Series 2 System Performance

Function	# PFUs	Speed Grade								Unit
		-2A	-3A	-4A	-5A	-6A	-7A	-7B	-8B	
16-bit loadable up/down counter	4	51.0	66.7	87.0	104.2	129.9	144.9	131.6	149.3	MHz
16-bit accumulator	4	51.0	66.7	87.0	104.2	129.9	144.9	131.6	149.3	MHz
8 x 8 parallel multiplier:										
— Multiplier mode, unpipelined[1]	22	14.2	19.3	25.1	31.0	36.0	40.3	37.7	44.8	MHz
— ROM mode, unpipelined[2]	9	41.5	55.6	71.9	87.7	107.5	122.0	103.1	120.5	MHz
— Multiplier mode, pipelined[3]	44	50.5	69.0	82.0	103.1	125.0	142.9	123.5	142.9	MHz
32 x 16 RAM:										
— Single port (read and write/ cycle)[4]	9	21.8	28.6	36.2	53.8	53.8	62.5	57.5	69.4	MHz
— Single port[5]	9	38.2	52.6	69.0	92.6	92.6	96.2	97.7	112.4	MHz
— Dual port[6]	16	38.2	52.6	83.3	92.6	92.6	96.2	97.7	112.4	MHz
36-bit parity check (internal)	4	13.9	11.0	9.1	7.4	5.6	5.2	6.1	5.1	ns
32-bit address decode (internal)	3.25	12.3	9.5	7.5	6.1	4.6	4.3	4.8	4.0	ns

1. Implemented using 4 x 1 multiplier mode (unpipelined), register-to-register, two 8-bit inputs, one 16-bit output.
2. Implemented using two 16 x 12 ROMs and one 12-bit adder, one 8-bit input, one fixed operand, one 16-bit output.
3. Implemented using 4 x 1 multiplier mode (fully pipelined), two 8-bit inputs, one 16-bit output (28 of 44 PFUs contain only pipelining registers).
4. Implemented using 16 x 4 synchronous single-port RAM mode allowing both read and write per clock cycle, including write/read address multiplexer.
5. Implemented using 16 x 4 synchronous single-port RAM mode allowing either read or write per clock cycle, including write/read address multiplexer.
6. Implemented using 16 x 2 synchronous dual-port RAM mode.
7. OR2TxxB available only in -7 and -8 speeds only.
8. Speed grades of -5, -6, and -7 are for OR2TxxA devices only.

Description (continued)

The FPGA's functionality is determined by internal configuration RAM. The FPGA's internal initialization/configuration circuitry loads the configuration data at powerup or under system control. The RAM is loaded by using one of several configuration modes. The configuration data resides externally in an EEPROM, EPROM, or ROM on the circuit board, or any other storage media. Serial ROMs provide a simple, low pin count method for configuring FPGAs, while the peripheral and JTAG configuration modes allow for easy, in-system programming (ISP).

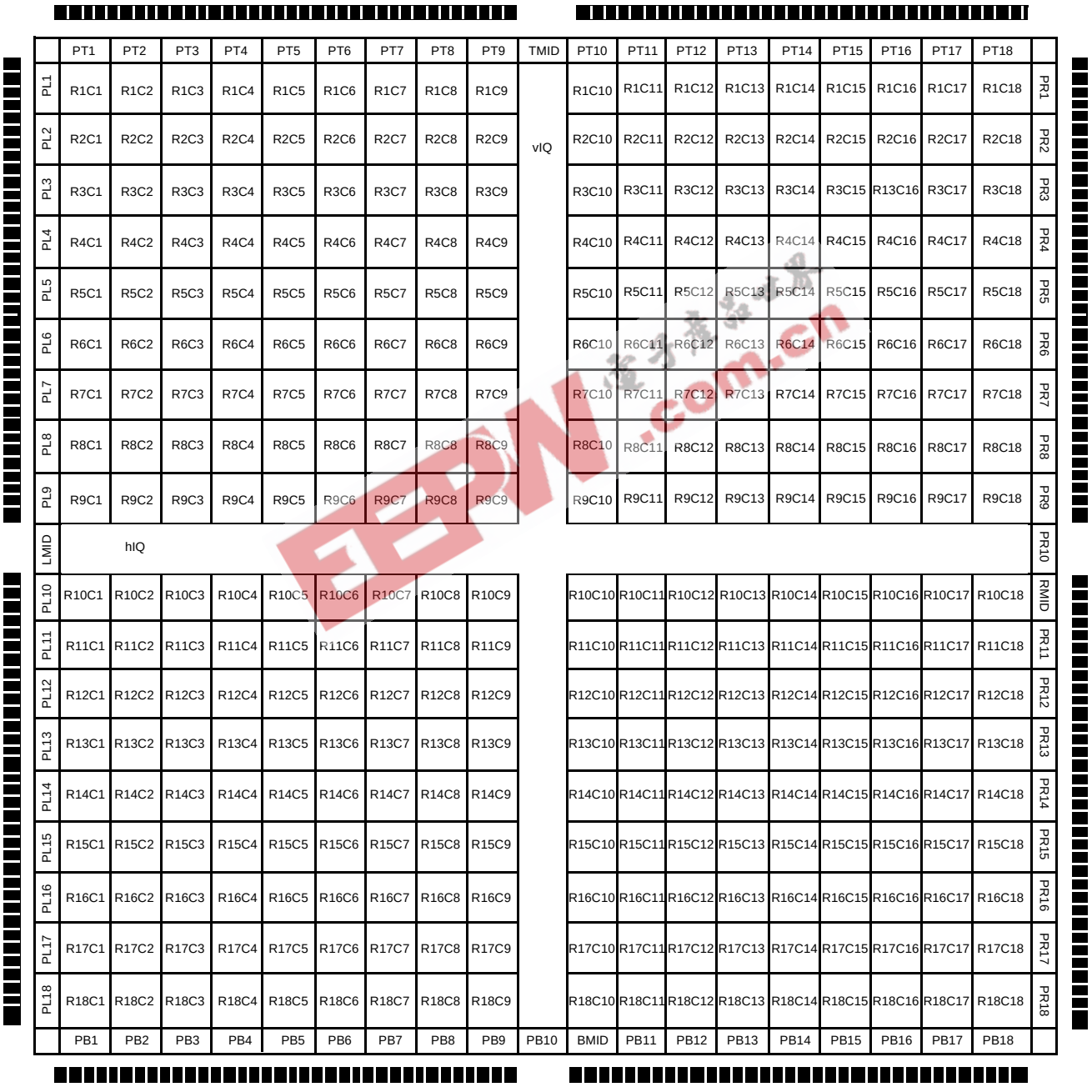

5-6779(F)

Figure 1. Series 2 Array

ORCA Foundry Development System Overview

The *ORCA* Foundry Development System interfaces to front-end design entry tools and provides the tools to produce a configured FPGA. In the design flow, the user defines the functionality of the FPGA at two points: at design entry and at the bit stream generation stage.

Following design entry, the development system's map, place, and route tools translate the netlist into a routed FPGA. Its bit stream generator is then used to generate the configuration data which is loaded into the FPGA's internal configuration RAM. When using the bit stream generator, the user selects options that affect the functionality of the FPGA. Combined with the front-end tools, *ORCA* Foundry produces configuration data that implements the various logic and routing options discussed in this data sheet.

Architecture

The *ORCA* Series FPGA is comprised of two basic elements: PLCs and PICs. Figure 1 shows an array of programmable logic cells (PLCs) surrounded by programmable input/output cells (PICs). The Series 2 has PLCs arranged in an array of 20 rows and 20 columns. PICs are located on all four sides of the FPGA between the PLCs and the IC edge.

The location of a PLC is indicated by its row and column so that a PLC in the second row and third column is R2C3. PICs are indicated similarly, with PT (top) and PB (bottom) designating rows and PL (left) and PR (right) designating columns, followed by a number. The routing resources and configuration RAM are not shown, but the interquad routing blocks (hIQ, vIQ) present in the Series 2 series are shown.

Each PIC contains the necessary I/O buffers to interface to bond pads. The PICs also contain the routing resources needed to connect signals from the bond pads to/from PLCs. The PICs do not contain any user-accessible logic elements, such as flip-flops.

Combinatorial logic is done in look-up tables (LUTs) located in the PFU. The PFU can be used in different modes to meet different logic requirements. The LUT's configurable medium-/large-grain architecture can be used to implement from one to four combinatorial logic functions. The flexibility of the LUT to handle wide input functions, as well as multiple smaller input functions, maximizes the gate count/PFU.

The LUTs can be programmed to operate in one of three modes: combinatorial, ripple, or memory. In combinatorial mode, the LUTs can realize any four-, five-, or six-input logic functions. In ripple mode, the high-speed carry logic is used for arithmetic functions, the new multiplier function, or the enhanced data path functions. In memory mode, the LUTs can be used as a 16 x 4 read/write or read-only memory (asynchronous mode or the new synchronous mode) or a new 16 x 2 dual-port memory.

Programmable Logic Cells

The programmable logic cell (PLC) consists of a programmable function unit (PFU) and routing resources. All PLCs in the array are identical. The PFU, which contains four LUTs and four latches/FFs for logic implementation, is discussed in the next section.

Programmable Function Unit

The PFUs are used for logic. Each PFU has 19 external inputs and six outputs and can operate in several modes. The functionality of the inputs and outputs depends on the operating mode.

The PFU uses three input data buses (A[4:0], B[4:0], WD[3:0]), four control inputs (C0, CK, CE, LSR), and a carry input (CIN); the last is used for fast arithmetic functions. There is a 5-bit output bus (O[4:0]) and a carry-out (COUT).

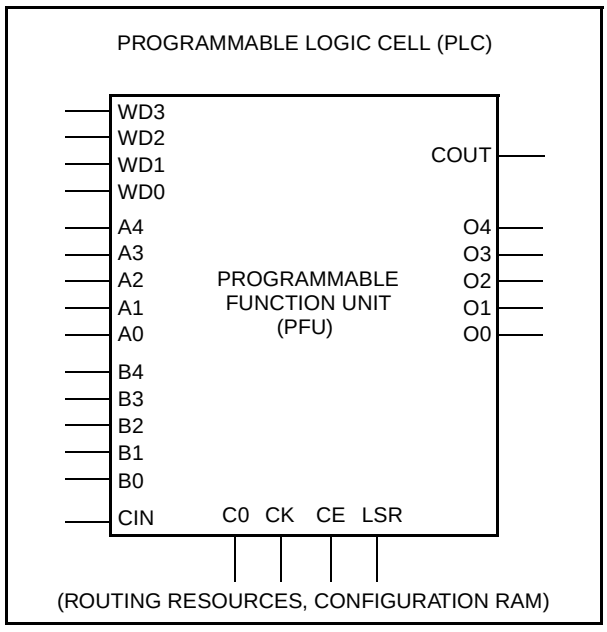

5-2750(F).r3

Figure 2. PFU Ports

Programmable Logic Cells (continued))

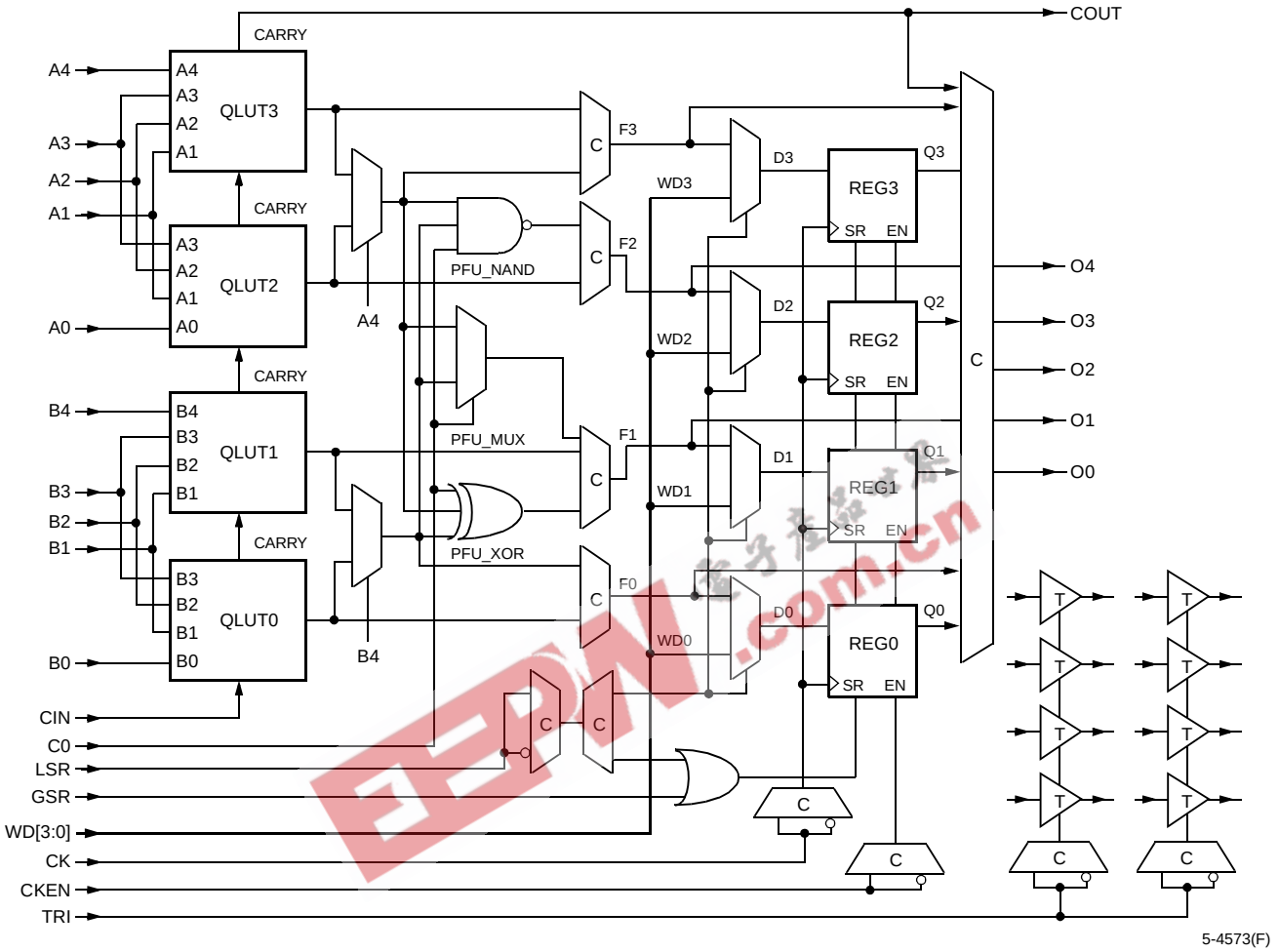

Key: C = controlled by configuration RAM.

Figure 3. Simplified PFU Diagram

Figure 2 and Figure 3 show high-level and detailed views of the ports in the PFU, respectively. The ports are referenced with a two- to four-character suffix to a PFU's location. As mentioned, there are two 5-bit input data buses (A[4:0] and B[4:0]) to the LUT, one 4-bit input data bus (WD[3:0]) to the latches/FFs, and an output data bus (O[4:0]).

Figure 3 shows the four latches/FFs (REG[3:0]) and the 64-bit look-up table (QLUT[3:0]) in the PFU. The PFU does combinatorial logic in the LUT and sequential logic in the latches/FFs. The LUT is static random access memory (SRAM) and can be used for read/write or read-only memory. The eight 3-state buffers found in each PLC are also shown, although they actually reside external to the PFU.

Each latch/FF can accept data from the LUT. Alternatively, the latches/FFs can accept direct data from WD[3:0], eliminating the LUT delay if no combinatorial function is needed. The LUT outputs can bypass the latches/FFs, which reduces the delay out of the PFU. It is possible to use the LUT and latches/FFs more or less independently. For example, the latches/FFs can be used as a 4-bit shift register, and the LUT can be used to detect when a register has a particular pattern in it.

Programmable Logic Cells (continued)

Table 3 lists the basic operating modes of the LUT. The operating mode affects the functionality of the PFU input and output ports and internal PFU routing. For example, in some operating modes, the WD[3:0] inputs are direct data inputs to the PFU latches/FFs. In the dual 16 x 2 memory mode, the same WD[3:0] inputs are used as a 4-bit data input bus into LUT memory.

The PFU is used in a variety of modes, as illustrated in Figures 4 through 11, and it is these specific modes that are most relevant to PFU functionality.

PFU Control Inputs

The four control inputs to the PFU are clock (CK), local set/reset (LSR), clock enable (CE), and C0. The CK, CE, and LSR inputs control the operation of all four latches in the PFU. An active-low global set/reset (GSRN) signal is also available to the latches/FFs in every PFU. Their operation is discussed briefly here, and in more detail in the Latches/Flip-Flops section. The polarity of the control inputs can be inverted.

The CK input is distributed to each PFU from a vertical or horizontal net. The CE input inhibits the latches/FFs from responding to data inputs. The CE input can be disabled, always enabling the clock. Each latch/FF can be independently programmed to be set or reset by the LSR and the global set/reset (GSRN) signals. Each PFU's LSR input can be configured as synchronous or asynchronous. The GSRN signal is always asynchronous. The LSR signal applies to all four latches/FFs in a PFU. The LSR input can be disabled (the default). The asynchronous set/reset is dominant over clocked inputs.

The C0 input is used as an input into the special PFU gates for wide functions in combinatorial logic mode. In the memory modes, this input is also used as the write-port enable input. The C0 input can be disabled (the default).

Look-Up Table Operating Modes

The look-up table (LUT) can be configured to operate in one of three general modes:

- Combinatorial logic mode
- Ripple mode
- Memory mode

The combinatorial logic mode uses a 64-bit look-up table to implement Boolean functions. The two 5-bit logic inputs, A[4:0] and B[4:0], and the C0 input are used as LUT inputs. The use of these ports changes based on the PFU operating mode.

The functionality of the LUT is determined by its operating mode. The entries in Table 3 show the basic modes of operation for combinatorial logic, ripple, and memory functions in the LUT. Depending on the operating mode, the LUT can be divided into sub-LUTs. The LUT is comprised of two 32-bit half look-up tables, HLUTA and HLUTB. Each half look-up table (HLUT) is comprised of two quarter look-up tables (QLUTs). HLUTA consists of QLUT2 and QLUT3, while HLUTB consists of QLUT0 and QLUT1. The outputs of QLUT0, QLUT1, QLUT2, and QLUT3 are F0, F1, F2, and F3, respectively.

Table 3. Look-Up Table Operating Modes

Mode	Function
F4A	Two functions of four inputs, some inputs shared (QLUT2/QLUT3)
F4B	Two functions of four inputs, some inputs shared (QLUT0/QLUT1)
F5A	One function of five inputs (HLUTA)
F5B	One function of five inputs (HLUTB)
R	4-bit ripple (LUT)
MA	16 x 2 asynchronous memory (HLUTA)
MB	16 x 2 asynchronous memory (HLUTB)
SSPM	16 x 4 synchronous single-port memory
SDPM	16 x 2 synchronous dual-port memory

For combinatorial logic, the LUT can be used to do any single function of six inputs, any two functions of five inputs, or four functions of four inputs (with some inputs shared), and three special functions based on the two five-input functions and C0.

Programmable Logic Cells (continued)

The LUT ripple mode operation offers standard arithmetic functions, such as 4-bit adders, subtractors, adder/subtractors, and counters. In the *ORCA* Series 2, there are two new ripple modes available. The first new mode is a 4 x 1 multiplier, and the second is a 4-bit comparator. These new modes offer the advantages of faster speeds as well as denser logic capabilities.

When the LUT is configured to operate in the memory mode, a 16 x 2 asynchronous memory fits into an HLUT. Both the MA and MB modes were available in previous *ORCA* architectures, and each mode can be configured in an HLUT separately. In the Series 2, there are two new memory modes available. The first is a 16 x 4 synchronous single-port memory (SSPM), and the second is a 16 x 2 synchronous dual-port memory (SDPM). These new modes offer easier implementation, faster speeds, denser RAMs, and a dual-port capability that wasn't previously offered as an option in the ATT2Cxx/ATT2Txx families.

If the LUT is configured to operate in the ripple mode, it cannot be used for basic combinatorial logic or memory functions. In modes other than the ripple, SSPM, and SDPM modes, combinations of operating modes are possible. For example, the LUT can be configured as a 16 x 2 RAM in one HLUT and a five-input combinatorial logic function in the second HLUT. This can be done by configuring HLUTA in the MA mode and HLUTB in the F5B mode (or vice versa).

F4A/F4B Mode—Two Four-Input Functions

Each HLUT can be used to implement two four-input combinatorial functions, but the total number of inputs into each HLUT cannot exceed five. The two QLUTs within each HLUT share three inputs. In HLUTA, the A1, A2, and A3 inputs are shared by QLUT2 and QLUT3. Similarly, in HLUTB, the B1, B2, and B3 inputs are shared by QLUT0 and QLUT1. The four outputs are F0, F1, F2, and F3. The results can be routed to the D0, D1, D2, and D3 latch/FF inputs or as an output of the PFU. The use of the LUT for four functions of up to four inputs each is given in Figure 4.

F5A/F5B Mode—One Five-Input Variable Function

Each HLUT can be used to implement any five-input combinatorial function. The input ports are A[4:0] and B[4:0], and the output ports are F0 and F3. One five or less input function is input into A[4:0], and the second five or less input function is input into B[4:0]. The results are routed to the latch/FF D0 and latch/FF D3 inputs, or as a PFU output. The use of the LUT for two independent functions of up to five inputs is shown in Figure 5. In this case, the LUT is configured in the F5A and F5B modes. As a variation, the LUT can do one function of up to five input variables and two four-input functions using F5A and F4B modes or F4A and F5B modes.

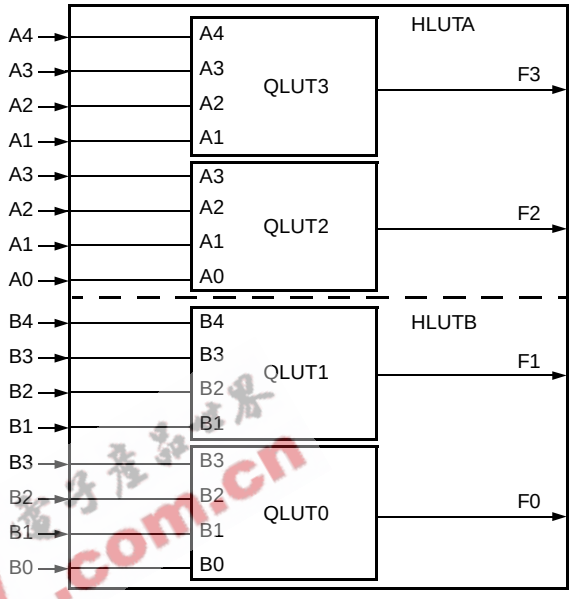

5-2753(F).r2

Figure 4. F4 Mode—Four Functions of Four-Input Variables

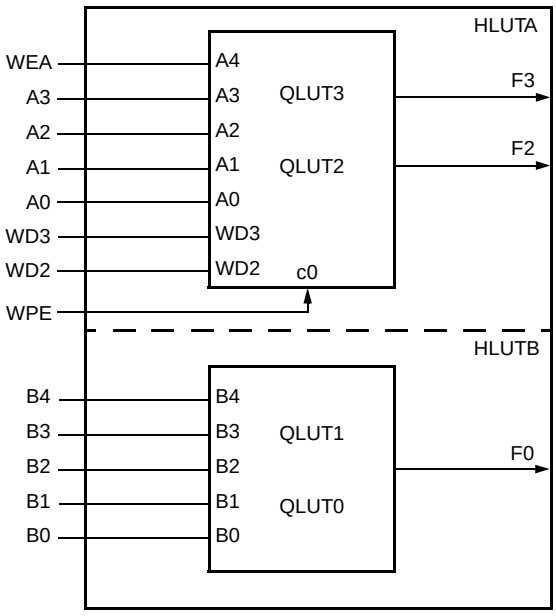

5-2845(F).r2

Figure 5. F5 Mode—Two Functions of Five-Input Variables

Programmable Logic Cells (continued)

F5M and F5X Modes—Special Function Modes

The PFU contains logic to implement two special function modes which are variations on the F5 mode. As with the F5 mode, the LUT implements two independent five-input functions. Figure 6 and Figure 7 show the schematics for F5M and F5X modes, respectively. The F5X and F5M functions differ from the basic F5A/F5B functions in that there are three logic gates which have inputs from the two 5-input LUT outputs. In some cases, this can be used for faster and/or wider logic functions.

As can be seen, two of the three inputs into the NAND, XOR, and MUX gates, F0 and F3, are from the LUT. The third input is from the C0 input into PFU. Since the C0 input bypasses the LUTs, it has a much smaller delay through the PFU than for all other inputs into the special PFU gates. This allows multiple PFUs to be cascaded together while reducing the delay of the critical path through the PFUs. The output of the first special function (either XOR or MUX) is F1. Since the XOR and MUX share the F1 output, the F5X and F5M modes are mutually exclusive. The output of the NAND PFU gate is F2 and is always available in either mode.

To use either the F5M or F5X functions, the LUT must be in the F5A/F5B mode; i.e., only 5-input LUTs allowed. In both the F5X and F5M functions, the outputs of the five-input combinatorial functions, F0 and F3, are also usable simultaneously with the special PFU gate outputs.

The output of the MUX is:

F1 = (HLUTA & C0) + (HLUTB & $\overline{C0}$)
F1 = (F3 & C0) + (F0 & $\overline{C0}$)

The output of the exclusive OR is:

F1 = HLUTA ⊕ HLUTB ⊕ C0
F1 = F3 ⊕ F0 ⊕ C0

The output of the NAND is:

F2 = $\overline{\text{HLUTA \& HLUTB \& C0}}$
F2 = $\overline{\text{F3 \& F0 \& C0}}$

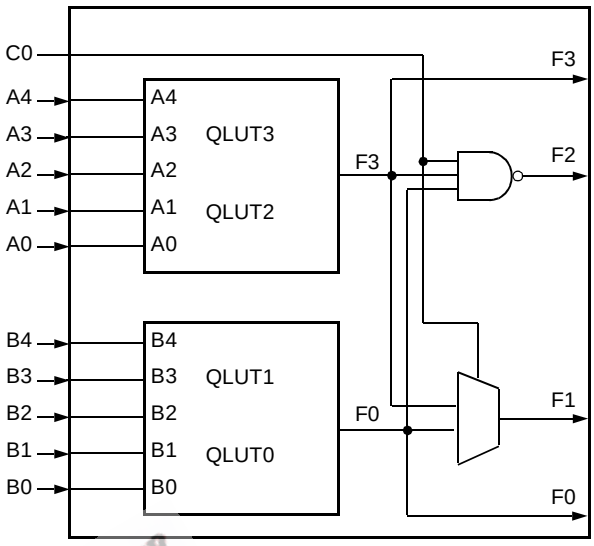

Figure 6. F5M Mode—Multiplexed Function of Two Independent Five-Input Variable Functions

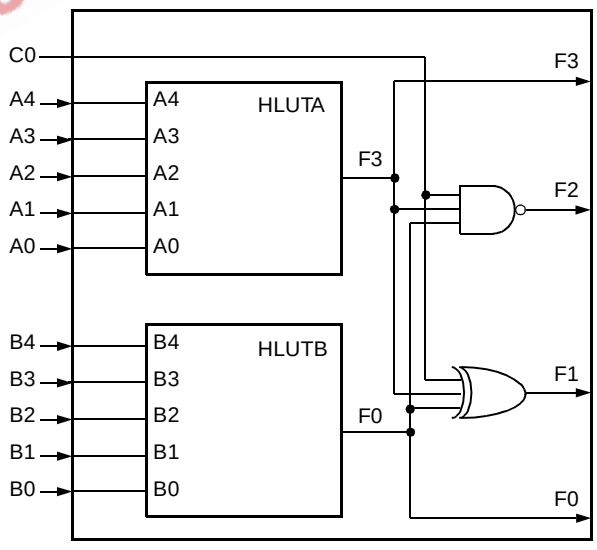

Figure 7. F5X Mode—Exclusive OR Function of Two Independent Five-Input Variable Functions

Programmable Logic Cells (continued)

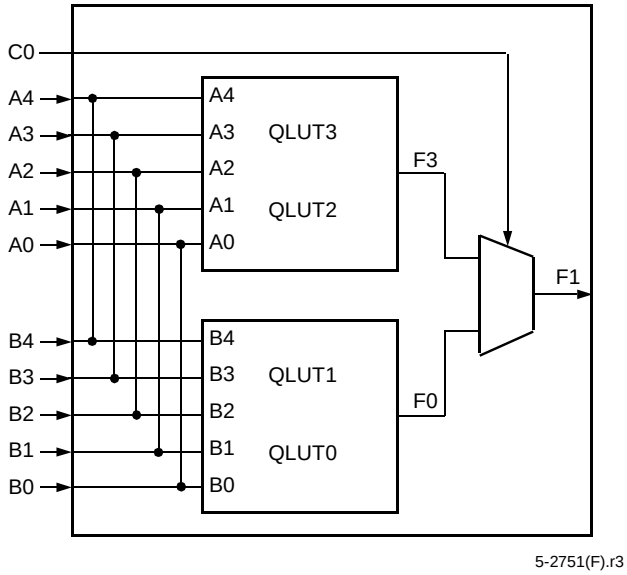

Figure 8. F5M Mode—One Six-Input Variable Function

F5M Mode—One Six-Input Variable Function

The LUT can be used to implement any function of six-input variables. As shown in Figure 8, five input signals (A[4:0]) are routed into both the A[4:0] and B[4:0] ports, and the C0 port is used for the sixth input. The output port is F1.

Ripple Mode

The LUT can do nibble-wide ripple functions with high-speed carry logic. Each QLUT has a dedicated carry-out net to route the carry to/from the adjacent QLUT. Using the internal carry circuits, fast arithmetic and counter functions can be implemented in one PFU. Similarly, each PFU has carry-in (CIN) and carry-out (COUT) ports for fast-carry routing between adjacent PFUs.

The ripple mode is generally used in operations on two 4-bit buses. Each QLUT has two operands and a ripple (generally carry) input, and provides a result and ripple (generally carry) output. A single bit is rippled from the previous QLUT and is used as input into the current QLUT. For QLUT0, the ripple input is from the PFU CIN port. The CIN data can come from either the fast-carry routing or the PFU input B4, or it can be tied to logic 1 or logic 0.

The resulting output and ripple output are calculated by using generate/propagate circuitry. In ripple mode, the two operands are input into A[3:0] and B[3:0]. The four result bits, one per QLUT, are F[3:0] (see Figure 9). The ripple output from QLUT3 can be routed to dedicated carry-out circuitry into any of four adjacent PLCs, or it can be placed on the O4 PFU output, or both. This allows the PLCs to be cascaded in the ripple mode so that nibble-wide ripple functions can be expanded easily to any length.

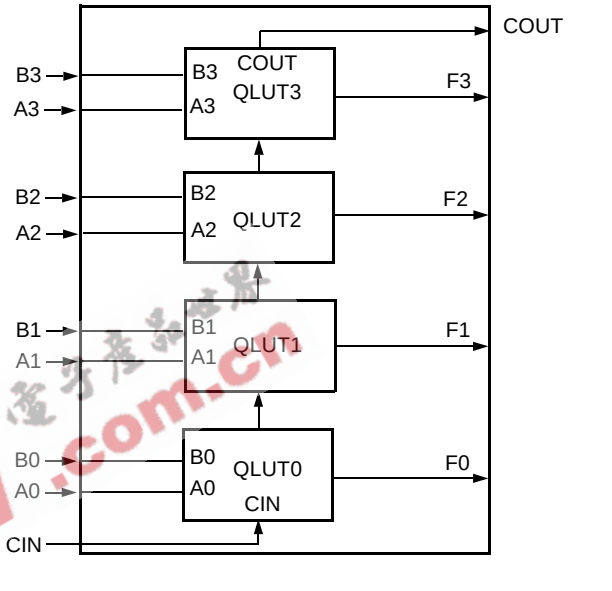

Figure 9. Ripple Mode

The ripple mode can be used in one of four submodes. The first of these is **adder/subtractor mode**. In this mode, each QLUT generates two separate outputs. One of the two outputs selects whether the carry-in is to be propagated to the carry-out of the current QLUT or if the carry-out needs to be generated. The result of this selection is placed on the carry-out signal, which is connected to the next QLUT or the COUT signal, if it is the last QLUT (QLUT3).

The other QLUT output creates the result bit for each QLUT that is connected to F[3:0]. If an adder/subtractor is needed, the control signal to select addition or subtraction is input on A4. The result bit is created in one-half of the QLUT from a single bit from each input bus, along with the ripple input bit. These inputs are also used to create the programmable propagate.

Programmable Logic Cells (continued)

The second submode is the **counter submode** (see Figure 10). The present count is supplied to input A[3:0], and then output F[3:0] will either be incremented by one for an up counter or decremented by one for a down counter. If an up counter or down counter is needed, the control signal to select the direction (up or down) is input on A4. Generally, the latches/FFs in the same PFU are used to hold the present count value.

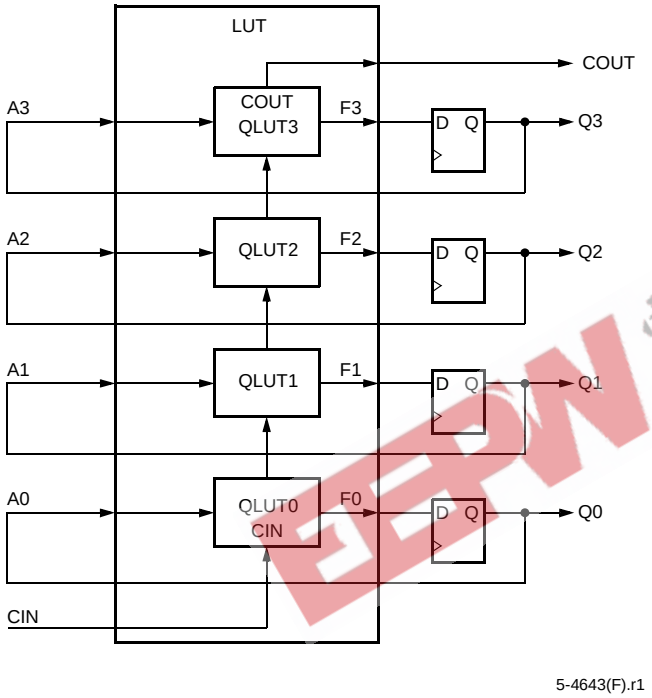

Figure 10. Counter Submode with Flip-Flops

In the third submode, **multiplier submode**, a single PFU can affect a 4 x 1-bit multiply and sum with a partial product (see Figure 11). The multiplier bit is input at A4, and the multiplicand bits are input at B[3:0], where B3 is the most significant bit (MSB). A[3:0] contains the partial product (or other input to be summed) from a previous stage. If A4 is logical 1, the multiplicand is added to the partial product. If A4 is logical zero, zero is added to the partial product, which is the same as passing the partial product. CIN can hold the carry-in from the less significant PFUs if the multiplicand is wider than 4 bits, and COUT holds any carry-out from the addition, which may then be used as part of the product or routed to another PFU in multiplier mode for multiplicand width expansion.

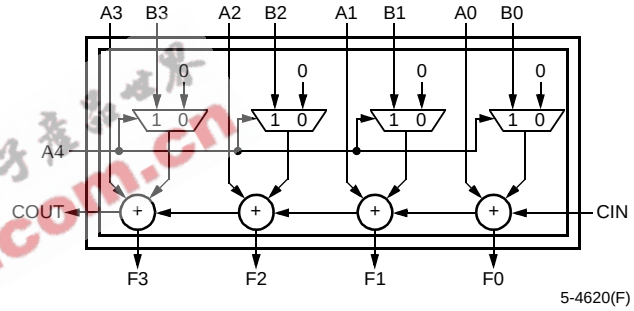

Figure 11. Multiplier Submode

Ripple mode's fourth submode features **equality comparators**, where one 4-bit bus is input on B[3:0], another 4-bit bus is input on B[3:0], and the carry-in is tied to 0 inside the PFU. The carry-out (¦) signal will be 0 if A = B or will be 1 if A ¦ B. If larger than 4 bits, the carry-out (¦) signal can be cascaded using fast-carry logic to the carry-in of any adjacent PFU. Comparators for greater than or equal or less than (>, =, <) continue to be supported using the ripple mode subtractor. The use of this submode could be shown using Figure 9 with CIN tied to 0.

Programmable Logic Cells (continued)

Asynchronous Memory Modes—MA and MB

The LUT in the PFU can be configured as either read/write or read-only memory. A read/write address (A[3:0], B[3:0]), write data (WD[1:0], WD[3:2]), and two write-enable (WE) ports are used for memory. In asynchronous memory mode, each HLUT can be used as a 16 x 2 memory. Each HLUT is configured independently, allowing functions such as a 16 x 2 memory in one HLUT and a logic function of five input variables or less in the other HLUT.

Figure 12 illustrates the use of the LUT for a 16 x 4 memory. When the LUTs are used as memory, there are independent address, input data, and output data buses. If the LUT is used as a 16 x 4 read/write memory, the A[3:0] and B[3:0] ports are address inputs (A[3:0]). The A4 and B4 ports are write-enable (WE) signals. The WD[3:0] inputs are the data inputs. The F[3:0] data outputs can be routed out on the O[4:0] PFU outputs or to the latch/FF D[3:0] inputs.

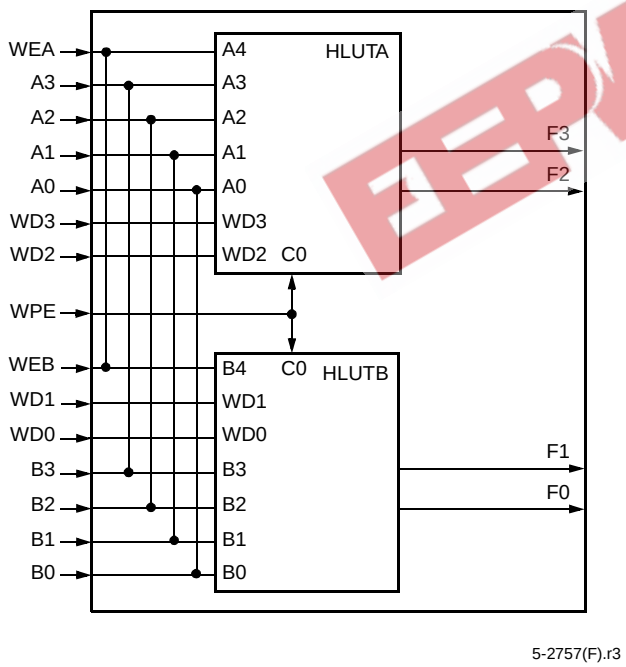

Figure 12. MA/MB Mode—16 x 4 RAM

To increase memory word depth above 16 (e.g., 32 x 4), two or more PLCs can be used. The address and write data inputs for the two or more PLCs are tied together (bit by bit), and the data outputs are routed through the four 3-statable BIDIs available in each PFU and are then tied together (bit by bit).

The control signal of the 3-statable BIDIs, called a RAM bank-enable, is created from a decode of upper address bits. The RAM bank-enable is then used to enable 4 bits of data from a PLC onto the read data bus.

The *ORCA* Series 2 series also has a new AND function available for each PFU in RAM mode. The inputs to this function are the write-enable (WE) signal and the write-port enable (WPE) signal. The write-enable signal is A4 for HLUTA and B4 for HLUTB, while the other input into the AND gates for both HLUTs is the write-port enable, input on C0 or CIN. Generally, the WPE input is driven by the same RAM bank-enable signal that controls the BIDIs in each PFU.

The selection of which RAM bank to write data into does not require the use of LUTs from other PFUs, as in previous *ORCA* architectures. This reduces the number of PFUs required for RAMs larger than 16 words in depth. Note that if either HLUT is in MA/MB mode, then the same WPE is active for both HLUTs.

To increase the memory's word size (e.g., 16 x 8), two or more PLCs are used again. The address, write-enable, and write-port enable of the PLCs are tied together (bit by bit), and the data is different for each PLC. Increasing both the address locations and word size is done by using a combination of these two techniques.

The LUT can be used simultaneously for both memory and a combinatorial logic function. Figure 13 shows the use of a LUT implementing a 16 x 2 RAM (HLUTA) and any function of up to five input variables (HLUTB).

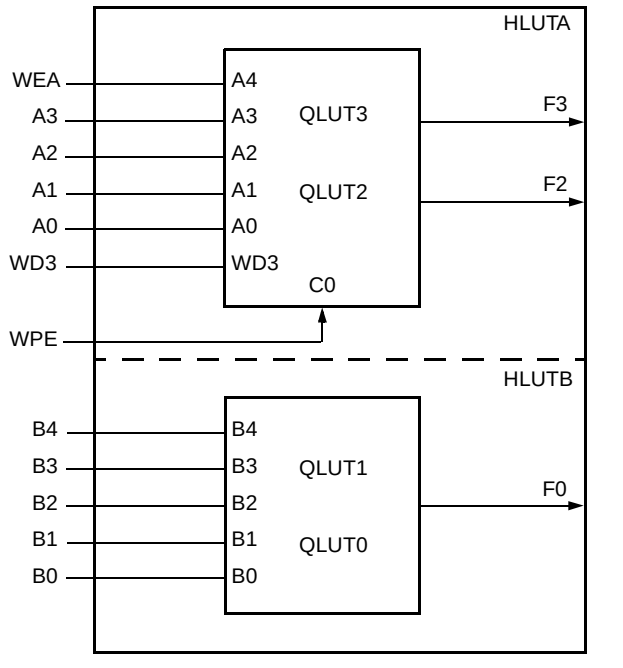

Figure 13. MA/F5 Mode—16 x 2 Memory and One Function of Five Input Variables

Programmable Logic Cells (continued)

Synchronous Memory Modes—SSPM and SDPM

The MA/MB asynchronous memory modes described previously allow the PFU to perform as a 16 x 4 (64 bits) single-port RAM. Synchronously writing to this RAM requires the write-enable control signal to be gated with the clock in another PFU to create a write pulse. To simplify this functionality, the Series 2 devices contain a **synchronous single-port memory** (SSPM) mode, where the generation of the write pulse is done in each PFU.

With SSPM mode, the entire LUT becomes a 16 x 4 RAM, as shown in Figure 14. In this mode, the input ports are write enable (WE), write-port enable (WPE), read/write address (A[3:0]), and write data (WD[3:0]). To synchronously write the RAM, WE (input into a4) and WPE (input into either C0 or CIN) are latched and ANDed together. The result of this AND function is sent to a pulse generator in the LUT, which writes the RAM synchronous to the RAM clock. This RAM clock is the same one sent to the PFU latches/FFs; however, if necessary, it can be programmably inverted.

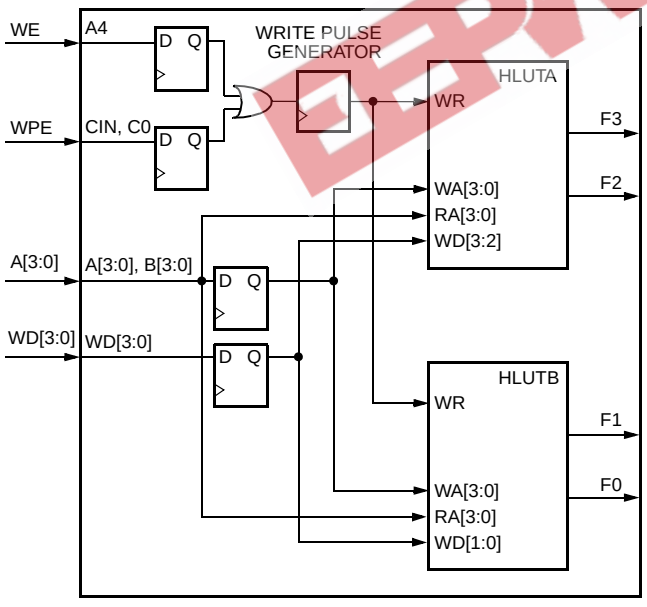

5-4642(F).r1

Figure 14. SSPM Mode—16 x 4 Synchronous Single-Port Memory

The write address (WA[3:0]) and write data (WD[3:0]) are also latched by the RAM clock in order to simplify the timing. Reading data from the RAM is done asynchronously; thus, the read address (RA[3:0]) is not latched. The result from the read operation is placed on the LUT outputs (F[3:0]). The F[3:0] data outputs can be routed out of the PFU or sent to the latch/FF D[3:0] inputs.

There are two ways to use the latches/FFs in conjunction with the SSPM. If the phase of the latch/FF clock and the RAM clock are the same, only a read address or write address can be supplied to the RAM that meets the synchronous timing requirements of both the RAM clock and latch/FF clock. Therefore, either a write to the RAM or a read from the RAM can be done in each clock cycle, but not both. If the RAM clock is inverted from the latch/FF clock, then both a write to the RAM and a read from the RAM can occur in each clock cycle. This is done by adding an external write address/read address multiplexer as shown in Figure 15.

The write address is supplied on the phase of the clock that allows for setup to the RAM clock, and the read address is supplied on the phase of the clock that allows the read data to be set up to the latch/FF clock. If a higher-speed RAM is required that allows both a read and write in each clock cycle, the synchronous dual-port memory mode (SDPM) can be used, since it does not require the use of an external multiplexer.

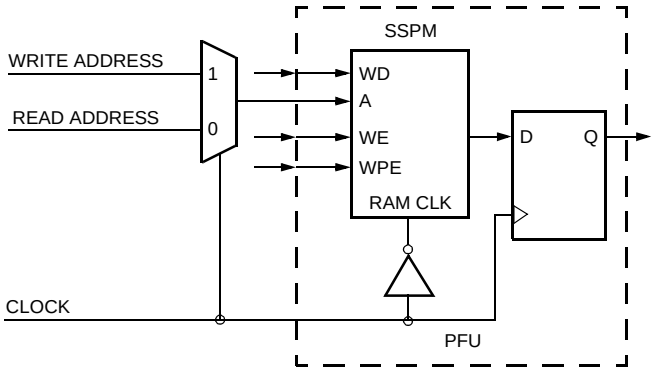

5-4644(F).r1

Figure 15. SSPM with Read/Write per Clock Cycle

Programmable Logic Cells (continued)

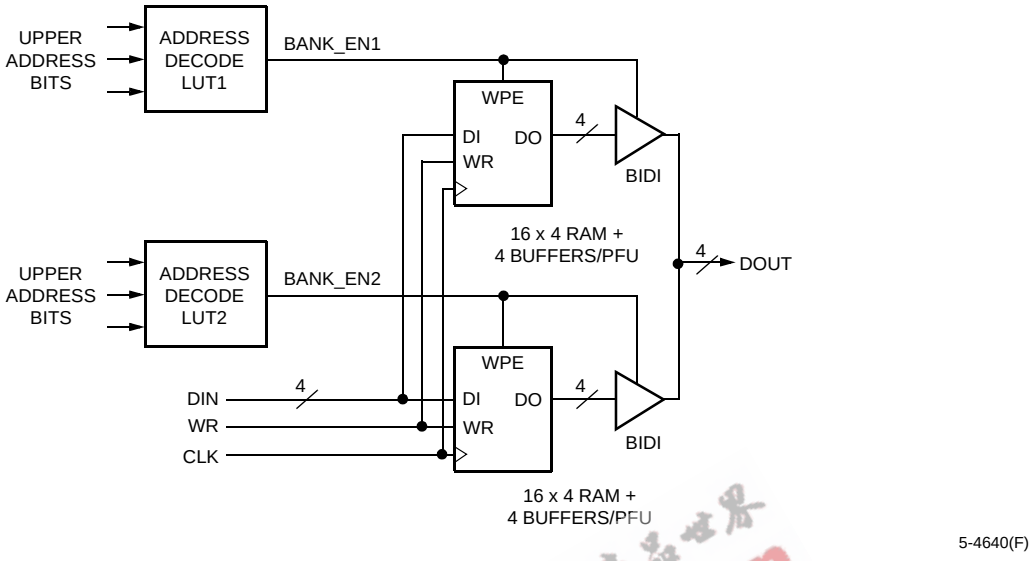

Note: The lower address bits are not shown.

Figure 16. Synchronous RAM with Write-Port Enable (WPE)

To increase memory word depth above 16 (e.g., 32 x 4), two or more PLCs can be used. The address and write data inputs for the two or more PLCs are tied together (bit by bit), and the data outputs are routed through the four 3-statable BIDIs available in each PFU. The BIDI outputs are then tied together (bit by bit), as seen in Figure 16.

The control signals of the 3-statable BIDIs, called RAM bank-enable (BANK_EN1 and BANK_EN2), are created from a decode of upper address bits. The RAM bank-enable is then used to enable 4 bits of data from a PLC onto the read data (DOUT) bus.

The Series 2 series now has a new AND function available for each PFU in RAM mode. The inputs to this function are the write-enable (WE) signal and the write-port enable (WPE) signal. The write-enable signal is input on A4, while the write-port enable is input on C0 or CIN. Generally, the WPE input is driven by the same RAM bank-enable signal that controls the BIDIs in each PFU.

The selection as to which RAM bank to write data into does not require the use of LUTs from other PFUs, as in previous *ORCA* architectures. This reduces the number of PFUs required for RAMs larger than 16 words in depth.

A special use of this method can be to increase word depth to 32 words. Since both the WPE input into the RAM and the 3-state input into the BIDI can be inverted, a decode of the one upper address bit is not required. Instead, the bank-enable signal for both banks is tied to the upper address bit, with the WPE and 3-state inputs active-high for one bank and active-low for the other.

To increase the memory's word size (e.g., 16 x 8), two or more PLCs are used again. The address, write-enable, and write-port enable of the PLCs are tied together (bit by bit), and the data is different for each PLC. Increasing both the address locations and word size is accomplished by using a combination of these two techniques.

Programmable Logic Cells (continued)

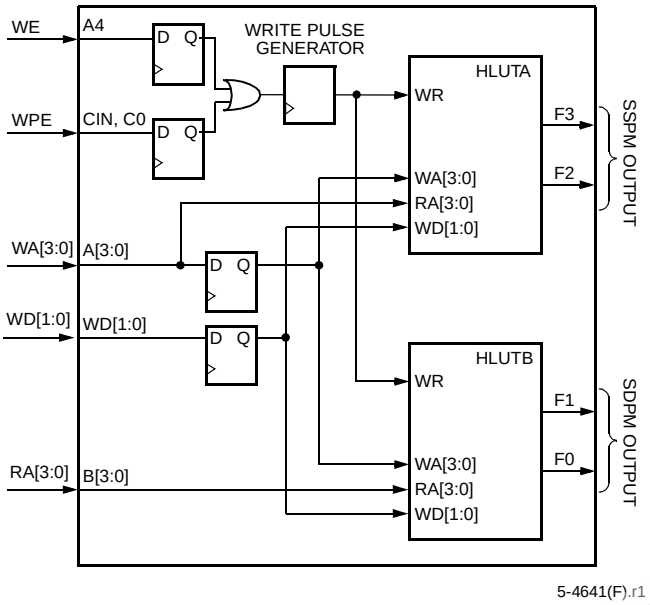

Figure 17. SDPM Mode—16 x 2 Synchronous Dual-Port Memory

The Series 2 devices have added a second synchronous memory mode known as the **synchronous dual-port memory** (SDPM) mode. This mode writes data into the memory synchronously in the same manner described previously for SSPM mode. The SDPM mode differs in that two separate 16 x 2 memories are created in each PFU that have the same WE, WPE, write data (WD[1:0]), and write address (WA[3:0]) inputs, as shown in Figure 17.

The outputs of HLUTA (F[3:2]) operate the same way they do in SSPM mode—the read address comes directly from the A[3:0] inputs used to create the latched write address. The outputs of HLUTB (F[1:0]) operate in a dual-port mode where the write address comes from the latched version of A[3:0], and the read address comes directly from RA[3:0], which is input on B[3:0].

Since external multiplexing of the write address and read address is not required, extremely fast RAMs can be created. New system applications that require an interface between two different asynchronous clocks can also be implemented using the SDPM mode. An example of this is accomplished by creating FIFOs where one clock controls the synchronous write of data into the FIFO, and the other clock controls the read address to allow reading of data at any time from the FIFO.

Latches/Flip-Flops

The four latches/FFs in the PFU can be used in a variety of configurations. In some cases, the configuration options apply to all four latches/FFs in the PFU. For other options, each latch/FF is independently programmable.

Table 4 summarizes these latch/FF options. The latches/FFs can be configured as either positive or negative level-sensitive latches, or positive or negative edge-triggered flip-flops. All latches/FFs in a given PFU share the same clock, and the clock to these latches/FFs can be inverted. The input into each latch/FF is from either the corresponding QLUT output (F[3:0]) or the direct data input (WD[3:0]). For latches/FFs located in the two outer rings of PLCs, additional inputs are possible. These additional inputs are fast paths from I/O pads located in PICs in the same row or column as the PLCs. If the latch/FF is not located in the two outer rings of the PLCs, the latch/FF input can also be tied to logic 0, which is the default. The four latch/FF outputs, Q[3:0], can be placed on the five PFU outputs, O[4:0].

Table 4. Configuration RAM Controlled Latch/Flip-Flop Operation

Function	Options
Functionality Common to All Latch/FFs in PFU	
LSR Operation	Asynchronous or synchronous
Clock Polarity	Noninverted or inverted
Front-End Select	Direct (WD[3:0]) or from LUT (F[3:0])
LSR Priority	Either LSR or CE has priority
Functionality Set Individually in Each Latch/FF in PFU	
Latch/FF Mode	Latch or flip-flop
Set/Reset Mode	Set or Reset

The four latches/FFs in a PFU share the clock (CK), clock enable (CE), and local set/reset (LSR) inputs. When CE is disabled, each latch/FF retains its previous value when clocked. Both the clock enable and LSR inputs can be inverted to be active-low.

Programmable Logic Cells (continued)

The set/reset operation of the latch/FF is controlled by two parameters: reset mode and set/reset value. When the global set/reset (GSRN) or local set/reset (LSR) are inactive, the storage element operates normally as a latch or FF. The reset mode is used to select a synchronous or asynchronous LSR operation. If synchronous, LSR is enabled only if clock enable (CE) is active. For the Series 2 series, a new option called the LSR priority allows the synchronous LSR to have priority over the CE input, thereby setting or resetting the FF independent of the state of CE. The clock enable is supported on FFs, not latches. The clock enable function is implemented by using a two-input multiplexer on the FF input, with one input being the previous state of the FF and the other input being the new data applied to the FF. The select of this two-input multiplexer is clock enable (CE), which selects either the new data or the previous state. When CE is inactive, the FF output does not change when the clock edge arrives.

The GSRN signal is only asynchronous, and it sets/resets all latches/FFs in the FPGA based upon the set/reset configuration bit for each latch/FF. The set/reset value determines whether GSRN and LSR are set or reset inputs. The set/reset value is independent for each latch/FF.

If the local set/reset is not needed, the latch/FF can be configured to have a data front-end select. Two data inputs are possible in the front-end select mode, with the LSR signal used to select which data input is used. The data input into each latch/FF is from the output of its associated QLUT F[3:0] or direct from WD[3:0], bypassing the LUT. In the front-end data select mode, both signals are available to the latches/FFs.

For PLCs that are in the two outside rows or columns of the array, the latch/FFs can have two inputs in addition to the F and WD inputs mentioned above. One input is from an I/O pad located at the PIC closest to either the left or right of the given PLC (if the PLC is in the left two columns or right two columns of the array). The other input is from an I/O pad located at the closest PIC either above or below the given PLC (if the PLC is in the top or the bottom two rows). It should be noted that both inputs are available for a 2 x 2 array of PLCs in each corner of the array. For the entire array of PLCs, if either or both of these inputs is unavailable, the latch/FF data input can be tied to a logic 0 instead (the default).

To speed up the interface between signals external to the FPGA and the latches/FFs, there are direct paths from latch/FF outputs to the I/O pads. This is done for each PLC that is adjacent to a PIC.

The latches/FFs can be configured in three modes:

1. Local synchronous set/reset: the input into the PFU's LSR port is used to synchronously set or reset each latch/FF.
2. Local asynchronous set/reset: the input into LSR asynchronously sets or resets each latch/FF.
3. Latch/FF with front-end select: the data select signal (actually LSR) selects the input into the latches/FFs between the LUT output and direct data in.

For all three modes, each latch/FF can be independently programmed as either set or reset. Each latch/FF in the PFU is independently configured to operate as either a latch or flip-flop. Figure 18 provides the logic functionality of the front-end select, global set/reset, and local set/reset operations.

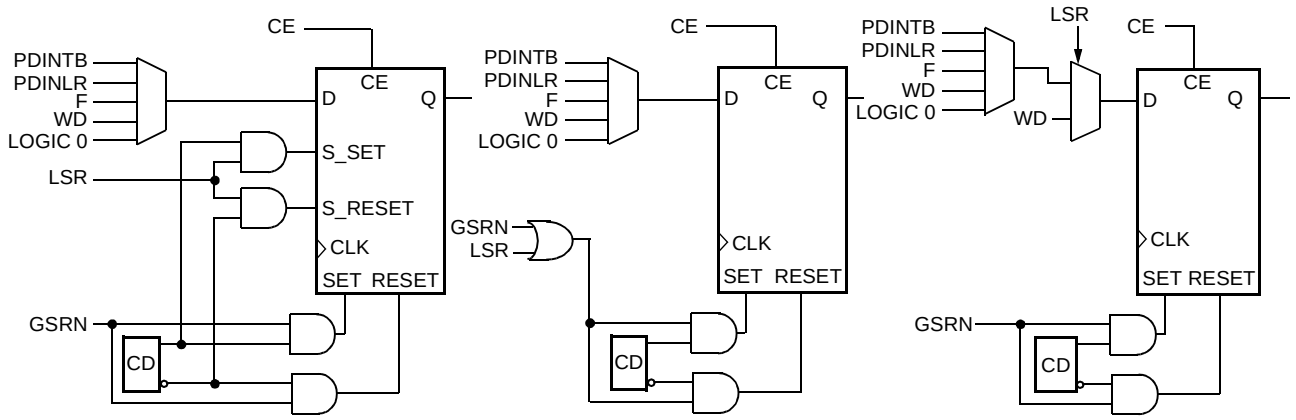

Note: CD = configuration data.

5-2839(F).a

Figure 18. Latch/FF Set/Reset Configurations

Programmable Logic Cells (continued)

PLC Routing Resources

Generally, the *ORCA* Foundry Development System is used to automatically route interconnections. Interactive routing with the *ORCA* Foundry design editor (EPIC) is also available for design optimization. To use EPIC for interactive layout, an understanding of the routing resources is needed and is provided in this section.

The routing resources consist of switching circuitry and metal interconnect segments. Generally, the metal lines which carry the signals are designated as routing nodes (lines). The switching circuitry connects the routing nodes, providing one or more of three basic functions: signal switching, amplification, and isolation. A net running from a PFU or PIC output (source) to a PLC or PIC input (destination) consists of one or more lines, connected by switching circuitry designated as configurable interconnect points (CIPs).

The following sections discuss PLC, PIC, and interquad routing resources. This section discusses the PLC switching circuitry, intra-PLC routing, inter-PLC routing, and clock distribution.

Configurable Interconnect Points

The process of connecting lines uses three basic types of switching circuits: two types of configurable interconnect points (CIPs) and bidirectional buffers (BIDIs). The basic element in CIPs is one or more pass transistors, each controlled by a configuration RAM bit. The two types of CIPs are the mutually exclusive (or multiplexed) CIP and the independent CIP.

A mutually exclusive set of CIPs contains two or more CIPs, only one of which can be on at a time. An independent CIP has no such restrictions and can be on independent of the state of other CIPs. Figure 19 shows an example of both types of CIPs.

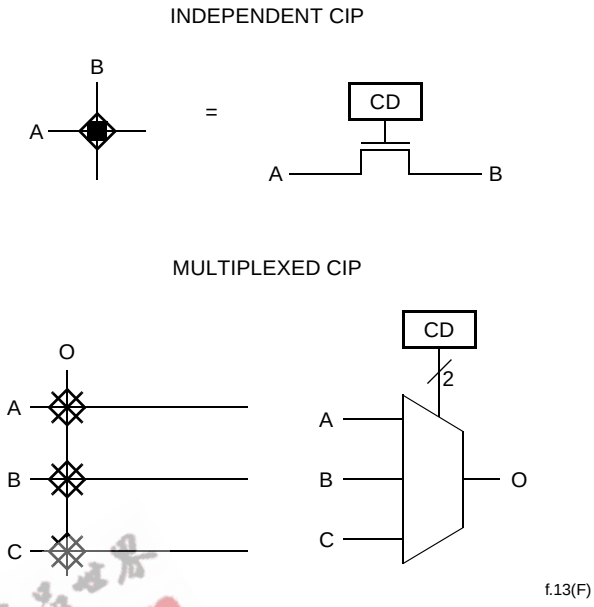

Figure 19. Configurable Interconnect Point

3-Statable Bidirectional Buffers

Bidirectional buffers provide isolation as well as amplification for signals routed a long distance. Bidirectional buffers are also used to drive signals directly onto either vertical or horizontal XL and XH lines (to be described later in the inter-PLC routing section). BIDIs are also used to indirectly route signals through the switching lines. Any number from zero to eight BIDIs can be used in a given PLC.

The BIDIs in a PLC are divided into two nibble-wide sets of four (BIDI and BIDIH). Each of these sets has a separate BIDI controller that can have an application net connected to its TRI input, which is used to 3-state enable the BIDIs. Although only one application net can be connected to both BIDI controllers, the sense of this signal (active-high, active-low, or ignored) can be configured independently. Therefore, one set can be used for driving signals, the other set can be used to create 3-state buses, both sets can be used for 3-state buses, and so forth.

Programmable Logic Cells (continued)

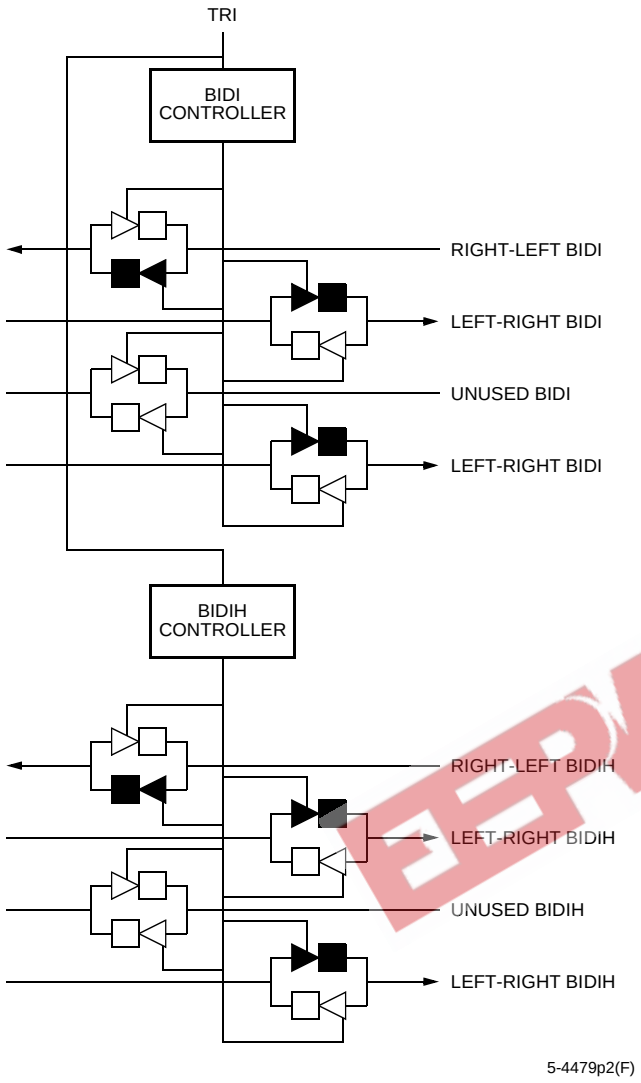

Figure 20. 3-Statable Bidirectional Buffers

Intra-PLC Routing

The function of the intra-PLC routing resources is to connect the PFU's input and output ports to the routing resources used for entry to and exit from the PLC. These are nets for providing PFU feedback, turning corners, or switching from one type of routing resource to another.

PFU Input and Output Ports. There are 19 input ports to each PFU. The PFU input ports are labeled A[4:0], B[4:0], WD[3:0], C0, CK, LSR, CIN, and CE. The six output ports are O[4:0] and COUT. These ports correspond to those described in the PFU section.

Switching Lines. There are four sets of switching lines in each PLC, one in each corner. Each set consists of five switching elements, labeled SUL[4:0], SUR[4:0], SLL[4:0], and SLR[4:0], for the upper-left, upper-right, lower-left, and lower-right sections of the PFUs, respectively. The switching lines connect to the PFU inputs and outputs as well as the BIDI and BIDIH lines, to be described later. They also connect to both the horizontal and vertical X1 and X4 lines (inter-PLC routing resources, described below) in their specific corner.

One of the four sets of switching lines can be connected to a set of switching lines in each of the four adjacent PLCs or PICs. This allows direct routing of up to five signals without using inter-PLC routing.

BIDI/BIDIH Lines. There are two sets of bidirectional lines in the PLC, each set consisting of four bidirectional buffers. They are designated BIDI and BIDIH and have similar functionality. The BIDI lines are used in conjunction with the XL lines, and the BIDIH lines are used in conjunction with the XH lines. Each side of the four BIDIs in the PLC is connected to a BIDI line on the left (BL[3:0]) and on the right (BR[3:0]). These lines can be connected to the XL lines through CIPs, with BL[3:0] connected to the vertical XL lines and BR[3:0] connected to the horizontal XL lines. Both BL[3:0] and BR[3:0] have CIPs which connect to the switching lines.

Similarly, each side of the four BIDIHs is connected to a BIDIH line: BLH[3:0] on the left and BRH[3:0] on the right. These lines can also be connected to the XH lines through CIPs, with BLH[3:0] connected to the vertical XH lines and BRH[3:0] connected to the horizontal XH lines. Both BLH[3:0] and BRH[3:0] have CIPs which connect to the switching lines.

CIPs are also provided to connect the BIDIH and BIDIL lines together on each side of the BIDIs. For example, BLH3 can connect to BL3, while BRH3 can connect to BR3.

Programmable Logic Cells (continued)

Inter-PLC Routing Resources

The inter-PLC routing is used to route signals between PLCs. The lines occur in groups of four, and differ in the numbers of PLCs spanned. The X1 lines span one PLC, the X4 lines span four PLCs, the XH lines span one-half the width (height) of the PLC array, and the XL lines span the width (height) of the PLC array. All types of lines run in both horizontal and vertical directions.

Table 5 shows the groups of inter-PLC lines in each PLC. In the table, there are two rows/columns each for X1 and X4 lines. In the design editor, the horizontal X1 and X4 lines are located above and below the PFU. Similarly, the vertical segments are located on each side. The XL and XH lines only run below and to the left of the PFU. The indexes specify individual lines within a group. For example, the VX4[2] line runs vertically to the left of the PFU, spans four PLCs, and is the third line in the 4-bit wide bus.

Table 5. Inter-PLC Routing Resources

Horizontal Lines	Vertical Lines	Distance Spanned
HX1[3:0]	VX1[3:0]	One PLC
HX1[7:4]	VX1[7:4]	One PLC
HX4[3:0]	VX4[3:0]	Four PLCs
HX4[7:4]	VX4[7:4]	Four PLCs
HXL[3:0]	VXL[3:0]	PLC Array
HXH[3:0]	VXH[3:0]	1/2 PLC Array
CKL, CKR	CKT, CKB	PLC Array

Figure 21 shows the inter-PLC routing within one PLC. Figure 22 provides a global view of inter-PLC routing resources across multiple PLCs.

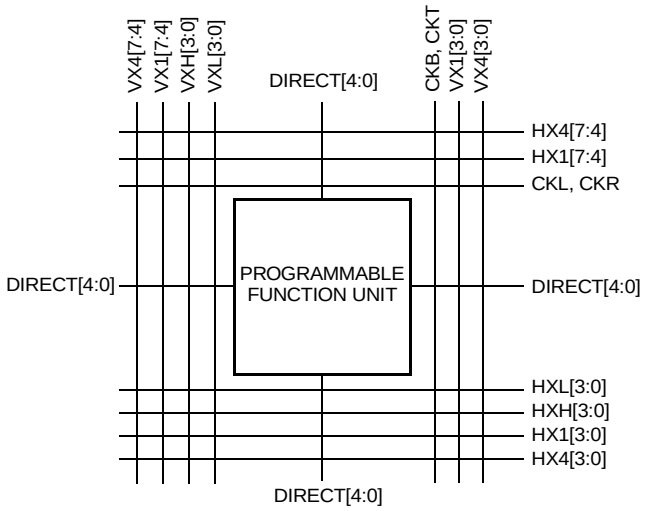

Figure 21. Single PLC View of Inter-PLC Lines

X1 Lines. There are a total of 16 X1 lines per PLC: eight vertical and eight horizontal. Each of these is subdivided into nibble-wide buses: HX1[3:0], HX1[7:4], VX1[3:0], and VX1[7:4]. An X1 line is one PLC long. If a net is longer than one PLC, an X1 line can be lengthened to n times its length by turning on n – 1 CIPs. A signal is routed onto an X1 line via the switching lines.

X4 Lines. There are four sets of four X4 lines, for a total of 16 X4 lines per PLC. They are HX4[3:0], HX4[7:4], VX4[3:0], and VX4[7:4]. Each set of X4 lines is twisted each time it passes through a PLC, and one of the four is broken with a CIP. This allows a signal to be routed for a length of four cells in any direction on a single line without additional CIPs. The X4 lines can be used to route any nets that require minimum delay. A longer net is routed by connecting two X4 lines together by a CIP. The X4 lines are accessed via the switching lines.

Programmable Logic Cells (continued)

XL Lines. The long XL lines run vertically and horizontally the height and width of the array, respectively. There are a total of eight XL lines per PLC: four horizontal (HXL[3:0]) and four vertical (VXL[3:0]). Each PLC column has four XL lines, and each PLC row has four XL lines. Each of the XL lines connects to the two PICs at either end. The Series 2, which consists of a 18 x 18 array of PLCs, contains 72 VXL and 72 HXL lines. They are intended primarily for global signals which must travel long distances and require minimum delay and/or skew, such as clocks.

There are three methods for routing signals onto the XL lines. In each PLC, there are two long-line drivers: one for a horizontal XL line, and one for a vertical XL line. Using the long-line drivers produces the least delay. The XL lines can also be driven directly by PFU outputs using the BIDI lines. In the third method, the XL lines are accessed by the bidirectional buffers, again using the BIDI lines.

XH Lines. Four by half (XH) lines run horizontally and four XH lines run vertically in each row and column in the array. These lines travel a distance of one-half the PLC array before being broken in the middle of the array, where they connect to the interquad block (discussed later). They also connect at the periphery of the FPGA to the PICs, like the XL lines. The XH lines do not twist like XL lines, allowing nibble-wide buses to be routed easily.

Two of the three methods of routing signals onto the XL lines can also be used for the XH lines. A special XH line driver is not supplied for the XH lines.

Clock Lines. For a very fast and low-skew clock (or other global signal tree), clock lines run the entire height and width of the PLC array. There are two horizontal clock lines per PLC row (CKL, CKR) and two vertical clock lines per PLC column (CKT, CKB). The source for these clock lines can be any of the four I/O buffers in the PIC. The horizontal clock lines in a row (CKL, CKR) are driven by the left and right PICs, respectively. The vertical clock lines in a column (CKT, CKB) are driven by the top and bottom PICs, respectively.

The clock lines are designed to be a clock spine. In each PLC, there is a fast connection available from the clock line to the long-line driver (described earlier). With this connection, one of the clock lines in each PLC can be used to drive one of the four XL lines perpendicular to it, which, in turn, creates a clock tree.

This feature is discussed in detail in the Clock Distribution Network section.

Minimizing Routing Delay

The CIP is an active element used to connect two lines. As an active element, it adds significantly to the resistance and capacitance of a net, thus increasing the net's delay. The advantage of the X1 line over a X4 line is routing flexibility. A net from PLC db to PLC cb is easily routed by using X1 lines. As more CIPs are added to a net, the delay increases. To increase speed, routes that are greater than two PLCs away are routed on the X4 lines because a CIP is located only in every fourth PLC. A net that spans eight PLCs requires seven X1 lines and six CIPs. Using X4 lines, the same net uses two lines and one CIP.

All routing resources in the PLC can carry 4-bit buses. In order for data to be used at a destination PLC that is in data path mode, the data must arrive unscrambled. For example, in data path operation, the least significant bit 0 must arrive at either A[0] or B[0]. If the bus is to be routed by using either X4 or XL lines (both of which twist as they propagate), the bus must be placed on the appropriate lines at the source PLC so that the data arrives at the destination unscrambled. The switching lines provide the most efficient means of connecting adjacent PLCs. Signals routed with these lines have minimum propagation delay.

Programmable Logic Cells (continued)

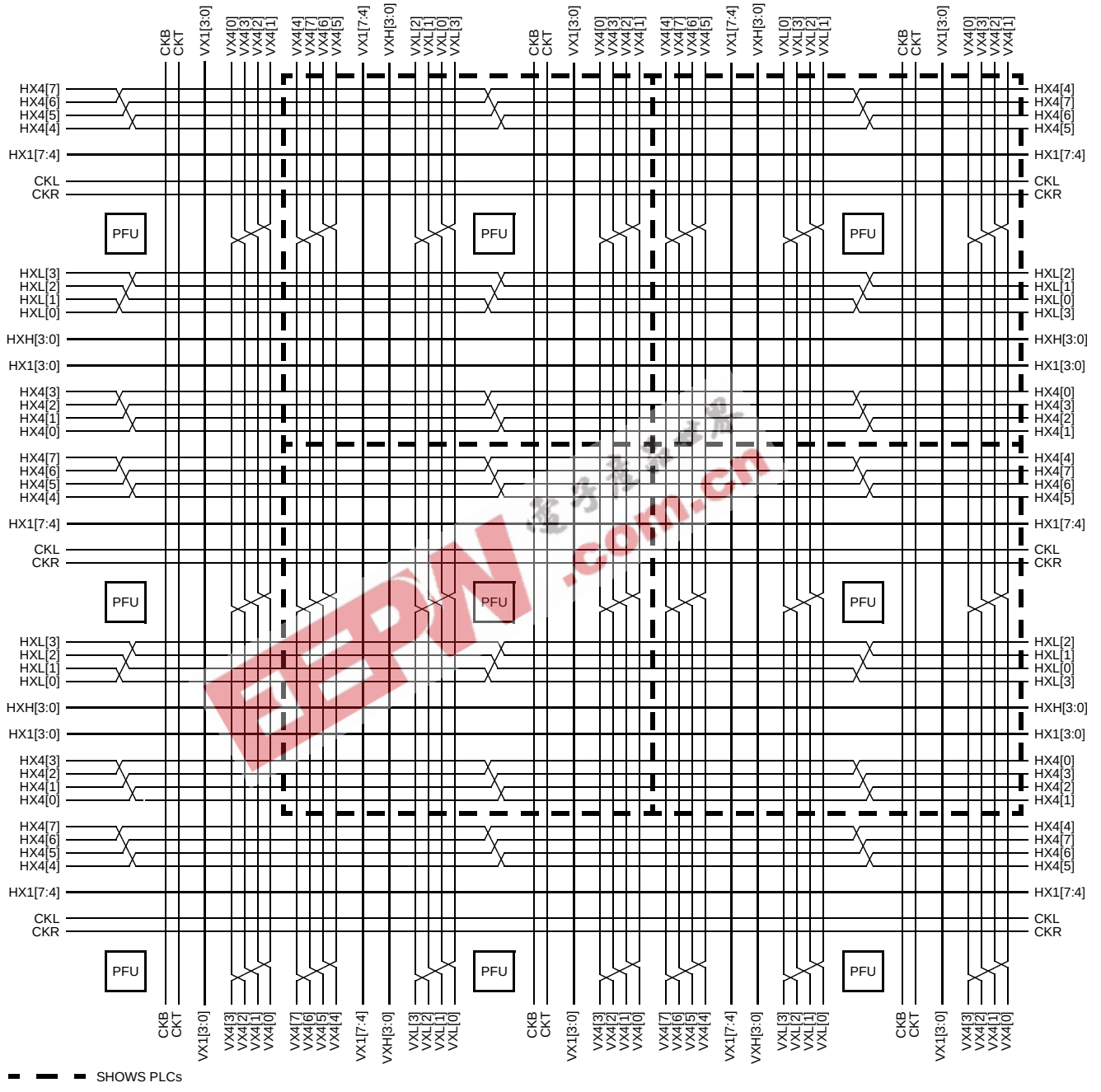

5-2841(F)2C.r9

Figure 22. Multiple PLC View of Inter-PLC Routing

Programmable Logic Cells (continued)

PLC Architectural Description

Figure 23 is an architectural drawing of the PLC which reflects the PFU, the lines, and the CIPs. A discussion of each of the letters in the drawing follows.

A. These are switching lines which give the router flexibility. In general switching theory, the more levels of indirection there are in the routing, the more routable the network is. The switching lines can also connect to adjacent PLCs.

The switching lines provide direct connections to PLCs directly to the top, bottom, left, and right, without using other routing resources. The ability to disable this connection between PLCs is provided so that each side of these connections can be used exclusively as switching lines in their respective PLC.

B. These CIPs connect the X1 routing. These are located in the middle of the PLC to allow the block to connect to either the left end of the horizontal X1 line from the right or the right end of the horizontal X1 line from the left, or both. By symmetry, the same principle is used in the vertical direction. The X1 lines are not twisted, making them suitable for data paths.

C. This set of CIPs is used to connect the X1 and X4 nets to the switching lines or to other X1 and X4 nets. The CIPs on the major diagonal allow data to be transmitted from X1 nets to the switching lines without being scrambled. The CIPs on the major diagonal also allow unscrambled data to be passed between the X1 and X4 nets.

In addition to the major diagonal CIPs for the X1 lines, other CIPs provide an alternative entry path into the PLC in case the first one is already used. The other CIPs are arrayed in two patterns, as shown. Both of these patterns start with the main diagonal, but the extra CIPs are arrayed on either a parallel diagonal shifted by one or shifted by two (modulo the size of the vertical bus (5)). This allows any four application nets incident to the PLC corner to be transferred to the five switching lines in that corner. Many patterns of five nets can also be transferred.

D. The X4 lines are twisted at each PLC. One of the four X4 lines is broken with a CIP, which allows a signal to be routed a distance of four PLCs in any direction on a single line without an intermediate CIP. The X4 lines are less populated with CIPs than the X1 lines to increase their speed. A CIP can be enabled to extend an X4 line four more PLCs, and so on.

For example, if an application signal is routed onto HX4[4] in a PLC, it appears on HX4[5] in the PLC to the right. This signal step-up continues until it reaches HX4[7], two PLCs later. At this point, the user can break the connection or continue the signal for another four PLCs.

E. These symbols are bidirectional buffers (BIDIs). There are four BIDIs per PLC, and they provide signal amplification as needed to decrease signal delay. The BIDIs are also used to transmit signals on XL lines.

F. These are the BIDI and BIDIH controllers. The 3-state control signal can be disabled. They can be configured as active-high or active-low independently of each other.

G. This set of CIPs allows a BIDI to get or put a signal from one set of switching lines on each side. The BIDIs can be accessed by the switching lines. These CIPs allow a nibble of data to be routed though the BIDIs and continue to a subsequent block. They also provide an alternative routing resource to improve routability.

H. These CIPs are used to take data from/to the BIDIs to/from the XL lines. These CIPs have been optimized to allow the BIDI buffers to drive the large load usually seen when using XL lines.

I. Each latch/FF can accept data: from an LUT output; from a direct data input signal from general routing; or, as in the case of PLCs located in the two rows (columns) adjacent to PICs, directly from the pad. In addition, the LUT outputs can bypass the latches/FFs completely and output data on the general routing resources. The four inputs shown are used as the direct input to the latches/FFs from general routing resources. If the LUT is in memory mode, the four inputs WD[3:0] are the data input to the memory.

Programmable Logic Cells (continued)

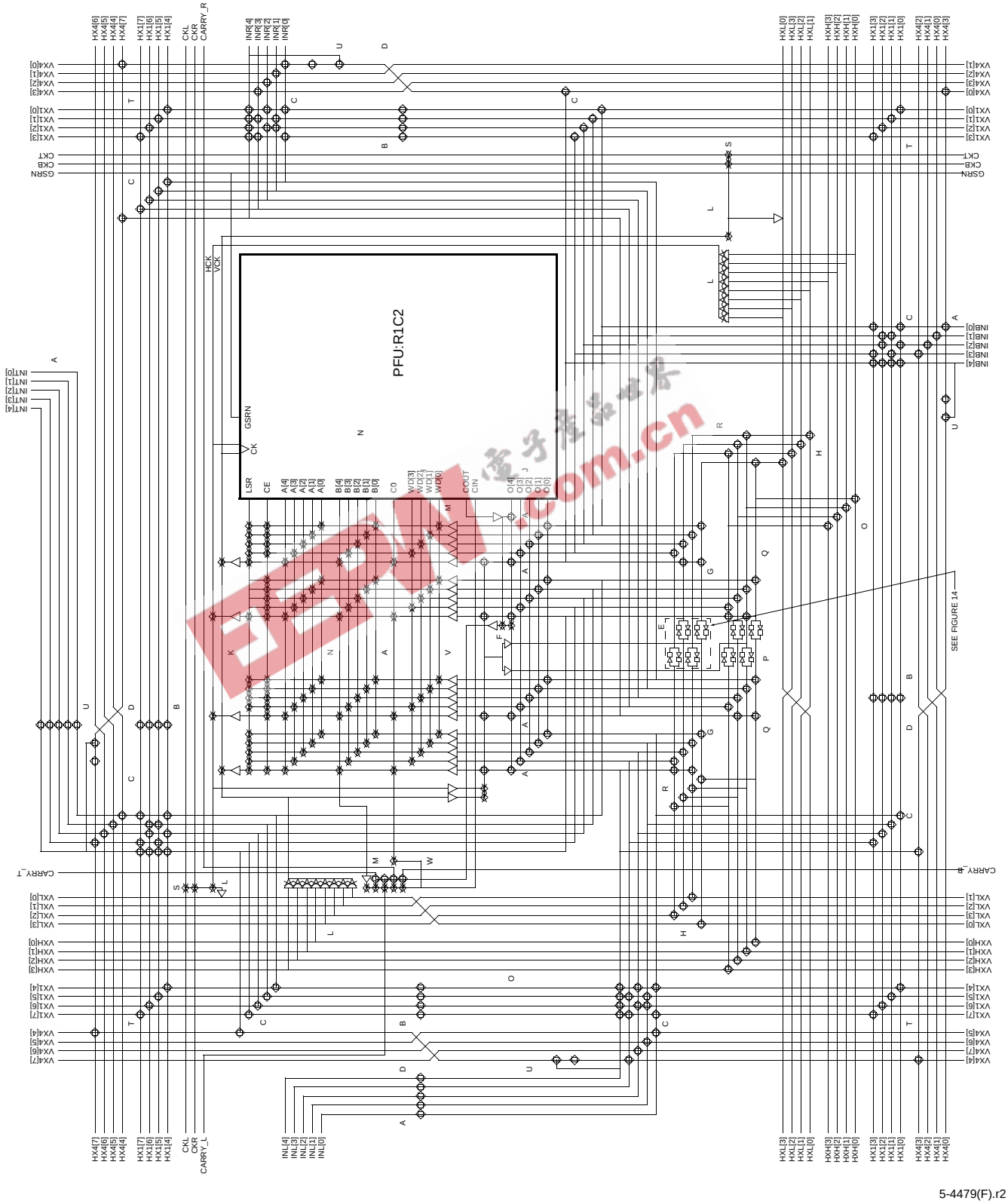

Figure 23. PLC Architecture

Programmable Logic Cells (continued)

J. Any five of the eight output signals can be routed out of the PLC. The eight signals are the four LUT outputs (F0, F1, F2, and F3) and the four latch/FF outputs (Q0, Q1, Q2, and Q3). This allows the user to access all four latch/FF outputs, read the present state and next state of a latch/FF, build a 4-bit shift register, etc. Each of the outputs can drive any number of the five PFU outputs. The speed of a signal can be increased by dividing its load among multiple PFU output drivers.

K. These lines deliver the auxiliary signals' clock enable and set/reset to the latches/FFs. All four of the latches/FFs share these signals.

L. This is the clock input to the latches/FFs. Any of the horizontal and vertical XH or XL lines can drive the clock of the PLC latches/FFs. Long-line drivers are provided so that a PLC can drive one XL line in the horizontal direction and one XL line in the vertical direction. The XL lines in each direction exhibit the same properties as X4 lines, except there are no CIPs. The clock lines (CKL, CKR, CKT, and CKB) and multiplexers/drivers are used to connect to the XL lines for low-skew, low-delay global signals.

The long lines run the length or width of the PLC array. They rotate to allow four PLCs in one row or column to generate four independent global signals. These lines do not have to be used for clock routing. Any highly used application net can use this resource, especially one requiring low skew.

M. These lines are used to route the fast carry signal to/from the neighboring four PLCs. The carry-out (COUT) of the PFU can also be routed out of the PFU onto the fifth output (O4). The carry-in (CIN) signal can also be supplied by the B4 input to the PFU.

N. These are the 11 logic inputs to the LUT. The A[4:0] inputs are provided into HLUTA, and the B[4:0] inputs are provided into HLUTB. The C0 input bypasses the main LUT and is used in the pfumux, pfuxor, and pfunand functions (F5M, F5X modes). Since this input bypasses the LUT, it can be used as a fast path around the LUT, allowing the implementation of fast, wide combinatorial functions. The C0 input can be disabled or inverted.

O. The XH lines run one-half the length (width) of the array before being broken by a CIP.

P. The BIDIHs are used to access the XH lines.

Q. The BIDIH lines are used to connect the BIDIHs to the XSW lines, the XH lines, or the BIDI lines.

R. These CIPs connect the BIDI lines and the BIDIH lines.

S. These are clock lines (CKT, CKB, CKL, and CKR) with the multiplexers and drivers to connect to the XL lines.

T. These CIPs connect X1 lines which cross in each corner to allow turns on the X1 lines without using the XSW lines.

U. These CIPs connect X4 lines and xsw lines, allowing nets that run a distance that is not divisible by four to be routed more efficiently.

V. This routing structure allows any PFU output, including LUT and latch/FF outputs, to be placed on O4 and be routed onto the fast carry routing.

W. This routing structure allows the fast carry routing to be routed onto the C0 PFU input.

Programmable Input/Output Cells

The programmable input/output cells (PICs) are located along the perimeter of the device. Each PIC interfaces to four bond pads and contains the necessary routing resources to provide an interface between I/O pads and the PLCs. Each PIC is composed of input buffers, output buffers, and routing resources as described below. Table 6 provides an overview of the programmable functions in an I/O cell. A is a simplified diagram of the functionality of the OR2CxxA series I/O cells, while B is a simplified functional diagram of the OR2TxxA and OR2TxxB series I/O cells.

Table 6. Input/Output Cell Options

Input	Option
Input Levels	TTL/CMOS (OR2CxxA only) 5 V PCI compliant (OR2CxxA only) 3.3 V PCI compliant (OR2TxxA only) 3.3 V and 5 V PCI compliant (OR2TxxB only)
Input Speed	Fast/Delayed
Float Value	Pull-up/Pull-down/None
Direct-in to FF	Fast/Delayed
Output	**Option**
Output Drive	12 mA/6 mA or 6 mA/3 mA
Output Speed	Fast/Slewlim/Sinklim
Output Source	FF Direct-out/General Routing
Output Sense	Active-high/-low
3-State Sense	Active-high/-low (3-state)

Inputs

Each I/O can be configured to be either an input, an output, or bidirectional I/O. Inputs for the OR2CxxA can be configured as either TTL or CMOS compatible. The I/O for the OR2TxxA and OR2TxxB series devices are 5 V tolerant, and will be described in a later section of this data sheet. Pull-up or pull-down resistors are available on inputs to minimize power consumption.

To allow zero hold time to PLC latches/FFs, the input signal can be delayed. When enabled, this delay affects the input signal driven to general routing, but does not affect the clock input or the input lines that drive the TRIDI buffers (used to drive onto XL, XH, BIDI, and BIDIH lines).

A fast path from the input buffer to the clock lines is also provided. Any one of the four I/O pads on any PIC can be used to drive the clock line generated in that PIC. This path cannot be delayed.

To reduce the time required to input a signal into the FPGA, a dedicated path (PDIN) from the I/O pads to the PFU flip-flops is provided. Like general input signals, this signal can be configured as normal or delayed. The delayed direct input can be selected independently from the delayed general input.

Inputs should have transition times of less than 500 ns and should not be left floating. If an input can float, a pull-up or pull-down should be enabled. Floating inputs increase power consumption, produce oscillations, and increase system noise. The OR2CxxA inputs have a typical hysteresis of approximately 280 mV (200 mV for the OR2TxxA and OR2TxxB) to reduce sensitivity to input noise. The PIC contains input circuitry which provides protection against latch-up and electrostatic discharge.

Programmable Input/Output Cells

(continued)

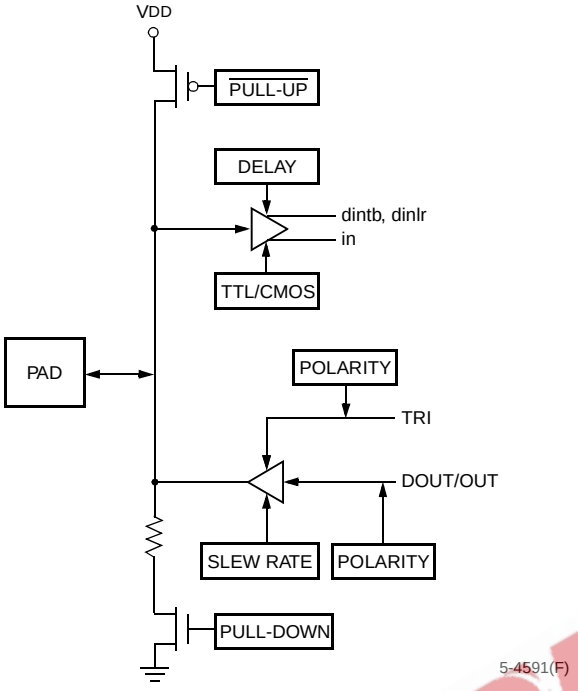

A. Simplified Diagram of OR2CxxA Programmable I/O Cell (PIC)

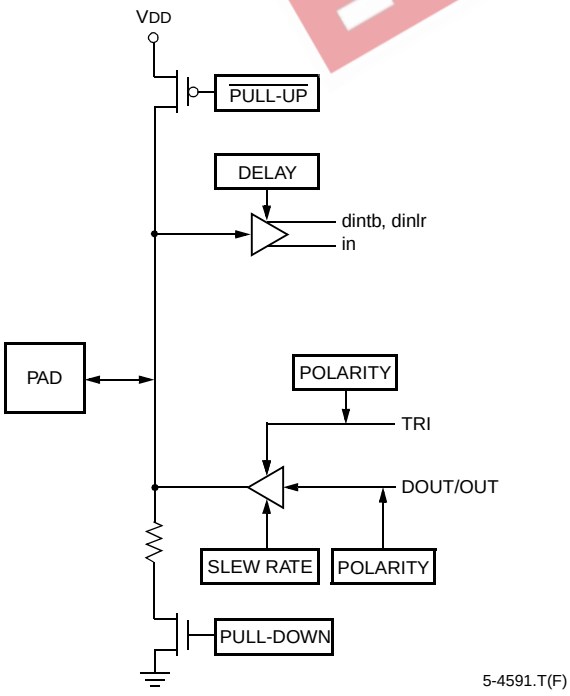

B. Simplified Diagram of OR2TxxA/OR2TxxB Programmable I/O Cell (PIC)

Figure 24. Simplified Diagrams

Outputs

The PIC's output drivers have programmable drive capability and slew rates. Three propagation delays (fast, slewlim, sinklim) are available on output drivers. The sinklim mode has the longest propagation delay and is used to minimize system noise and minimize power consumption. The fast and slewlim modes allow critical timing to be met.

The drive current is 12 mA sink/6 mA source for the slewlim and fast output speed selections and 6 mA sink/3 mA source for the sinklim output. Two adjacent outputs can be interconnected to increase the output sink current to 24 mA.

All outputs that are not speed critical should be configured as sinklim to minimize power and noise. The number of outputs that switch simultaneously in the same direction should be limited to minimize ground bounce. To minimize ground bounce problems, locate heavily loaded output buffers near the ground pads. Ground bounce is generally a function of the driving circuits, traces on the PCB, and loads and is best determined with a circuit simulation.

Outputs can be inverted, and 3-state control signals can be active-high or active-low. An open-drain output may be obtained by using the same signal for driving the output and 3-state signal nets so that the buffer output is enabled only by a low. At powerup, the output drivers are in slewlim mode, and the input buffers are configured as TTL-level compatible with a pull-up. If an output is not to be driven in the selected configuration mode, it is 3-stated.

5 V Tolerant I/O (OR2TxxA)

The I/O on the OR2TxxA series devices allow interconnection to both 3.3 V and 5 V device (selectable on a per-pin basis) by way of special $V_{DD}5$ pins that have been added to the OR2TxxA devices. If any I/O on the OR2TxxA device interfaces to a 5 V input, then all of the $V_{DD}5$ pins must be connected to the 5 V supply. If no pins on the device interface to a 5 V signal, then the $V_{DD}5$ pins must be connected to the 3.3 V supply.

If the $V_{DD}5$ pins are disconnected (i.e., they are floating), the device will not be damaged; however, the device may not operate properly until $V_{DD}5$ is returned to a proper voltage level. If the $V_{DD}5$ pins are then shorted to ground, a large current flow will develop, and the device may be damaged.

Programmable Input/Output Cells

(continued)

Regardless of the power supply that the VDD5 pins are connected to (5 V or 3.3 V), the OR2TxxA devices will drive the pin to the 3.3 V levels when the output buffer is enabled. If the other device being driven by the OR2TxxA device has TTL-compatible inputs, then the device will not dissipate much input buffer power. This is because the OR2TxxA output is being driven to a higher level than the TTL level required. If the other device has a CMOS-compatible input, the amount of input buffer power will also be small. Both of these power values are dependent upon the input buffer characteristics of the other device when driven at the OR2TxxA output buffer voltage levels.

The 2TxxA device has internal programmable pull-ups on the I/O buffers. These pull-up voltages are always referenced to VDD. This means that the VDD5 voltage has no effect on the value of the pull-up voltage at the pad. This voltage level is always sufficient to pull the input buffer of the 2TxxA device to a high state. The pin on the 2TxxA device will be at a level 1.0 V below VDD (minimum of 2.0 V with a minimum VDD of 3.0 V). This voltage is sufficient to pull the external pin up to a 3.3 V CMOS high-input level (1.8 V min) or a TTL high-input level (2.0 V min) in a 5 V tolerant system, but it will never pull the pad up to the VDD5 rail. Therefore, in a 5 V tolerant system using 5 V CMOS parts, care must be taken to evaluate the use of these pull-ups to pull the pin of the 2TxxA device to a typical 5 V CMOS high-input level (2.2 V min).

For more information on 5 V tolerant I/Os, please see ORCA® *Series 5 V Tolerant I/Os* Application Note (AP99-027FPGA), May 1999.

5 V Tolerant I/O (OR2TxxB)

The I/O on the OR2TxxB Series devices allow interconnection to both 3.3 V and 5 V device (selectable on a per-pin basis). Unlike the OR2TxxA family, when interfaceing into a 5 V signal, it no longer requires a VDD5 supply.

The OR2TxxB devices will drive the pin to the 3.3 V levels when the output buffer is enabled. If the other device being driven by the OR2TxxB device has TTL-compatible inputs, then the device will not dissipate much input buffer power. This is because the OR2TxxB output is being driven to a higher level than the TTL level required. If the other device has a CMOS-compatible input, the amount of input buffer power will also be small. Both of these power values are dependent upon the input buffer characteristics of the other device when driven at the OR2TxxB output buffer voltage levels.

The OR2TxxB device has internal programmable pull-ups on the I/O buffers. These pull-up voltages are always referenced to VDD and are always sufficient to pull the input buffer of the OR2TxxB device to a high state. The pin on the OR2TxxB device will be at a level 1.0 V below VDD (minimum of 2.0 V with a minimum VDD of 3.0 V). This voltage is sufficient to pull the external pin up to a 3.3 V CMOS high-input level (1.8 V, min) or a TTL high input level (2.0 V, min) in a 5 V tolerant system. Therefore, in a 5 V tolerant system using 5 V CMOS parts, care must be taken to evaluate the use of these pull-ups to pull the pin of the OR2TxxB device to a typical 5 V CMOS high-input level (2.2 V, min).

PCI Compliant I/O

The I/O on the OR2TxxB Series devices allows compliance with PCI local bus (Rev. 2.1) 5 V and 3.3 V signaling environments. The signaling environment used for each input buffer can be selected on a per-pin basis. The selection provides the appropriate I/O clamping diodes for PCI compliance.

OR2TxxB devices have 5 V tolerant I/Os as previously explained, but can optionally be selected on a pin-by-pin basis to be PCI bus 3.3 V signaling compliant (PCI bus 5 V signaling compliance occurs in 5 V tolerant operation mode). Inputs may have a pull-up or pull-down resistor selected on an input for signal stabilization and power management. Input signals in a PIO can be passed to PIC routing on any of three paths, two general signal paths into PIC routing, and/or a fast route into the clock routing system.

OR2TxxA series devices are only compliant in 3.3 V PCI Local Bus (Rev 2.1) signalling environments. OR2CxxA devices are only compliant in 5 V PCI Local Bus (Rev 2.1) signalling environments.

Programmable Input/Output Cells

(continued)

PIC Routing Resources

The PIC routing is designed to route 4-bit wide buses efficiently. For example, any four consecutive I/O pads can have both their input and output signals routed into one PLC. Using only PIC routing, either the input or output data can be routed to/from a single PLC from/to any eight pads in a row, as in Figure 25.

The connections between PLCs and the I/O pad are provided by two basic types of routing resources. These are routing resources internal to the PIC and routing resources used for PIC-PLC connection. Figure 26 and Figure 27 show a high-level and detailed view of these routing resources, respectively.

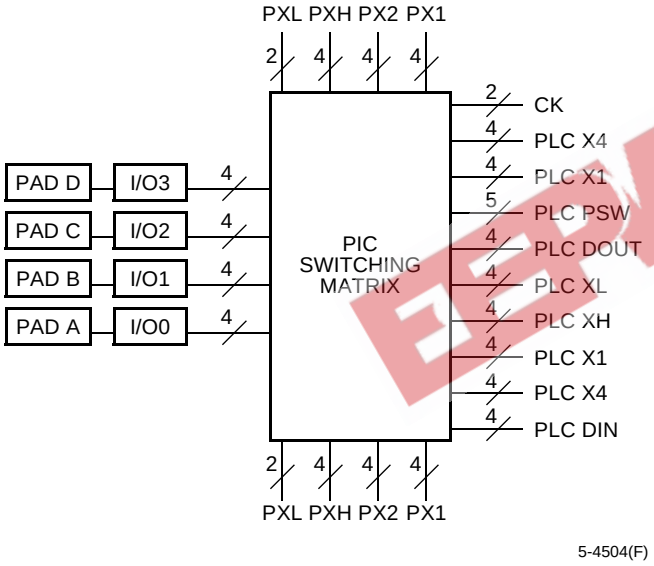

Figure 25. Simplified PIC Routing Diagram

The PIC's name is represented by a two-letter designation to indicate on which side of the device it is located followed by a number to indicate in which row or column it is located. The first letter, P, designates that the cell is a PIC and not a PLC. The second letter indicates the side of the array where the PIC is located. The four sides are left (L), right (R), top (T), and bottom (B). The individual I/O pad is indicated by a single letter (either A, B, C, or D) placed at the end of the PIC name. As an example, PL10A indicates a pad located on the left side of the array in the tenth row.

Each PIC has four pads and each pad can be configured as an input, an output (3-statable), a direct output, or a bidirectional I/O. When the pads are used as inputs, the external signals are provided to the internal circuitry at IN[3:0]. When the pads are used to provide direct inputs to the latches/FFs, they are connected through DIN[3:0]. When the pads are used as outputs, the internal signals connect to the pads through OUT[3:0]. When the pads are used as direct outputs, the output from the latches/flip-flops in the PLCs to the PIC is designated DOUT[3:0]. When the outputs are 3-statable, the 3-state enable signals are TS[3:0].

Routing Resources Internal to the PIC

For inter-PIC routing, the PIC contains 14 lines used to route signals around the perimeter of the FPGA. Figure 25 shows these lines running vertically for a PIC located on the left side. Figure 26 shows the lines running horizontally for a PIC located at the top of the FPGA.

PXL Lines. Each PIC has two PXL lines, labeled PXL[1:0]. Like the XL lines of the PLC, the PXL lines span the entire edge of the FPGA.

PXH Lines. Each PIC has four PXH lines, labeled PXH[3:0]. Like the XH lines of the PLC, the PXH lines span half the edge of the FPGA.

PX2 Lines. There are four PX2 lines in each PIC, labeled PX2[3:0]. The PX2 lines pass through two adjacent PICs before being broken. These are used to route nets around the perimeter equally a distance of two or more PICs.

PX1 Lines. Each PIC has four PX1 lines, labeled PX1[3:0]. The PX1 lines are one PIC long and are extended to adjacent PICs by enabling CIPs.

Programmable Input/Output Cells

(continued)

PIC Architectural Description

The PIC architecture given in Figure 26 is described using the following letter references. The figure depicts a PIC at the top of the array, so inter-PIC routing is horizontal and the indirect PIC-PLC routing is horizontal to vertical. In some cases, letters are provided in more than one location to indicate the path of a line.

A. As in the PLCs, the PIC contains a set of lines which run the length (width) of the array. The PXL lines connect in the corners of the array to other PXL lines. The PXL lines also connect to the PIC BIDI, PIC BIDIH, and LLDRV lines. As in the PLC XL lines, the PXH lines twist as they propagate through the PICs.

B. As in the PLCs, the PIC contains a set of lines which run one-half the length (width) of the array. The PXH lines connect in the corners and in the middle of the array perimeter to other PXH lines. The PXH lines also connect to the PIC BIDI, PIC BIDIH, and LLDRV lines. As in the PLC XH lines, the PXH lines do not twist as they propagate through the PICs.

C. The PX2[3:0] lines span a length of two PICs before intersecting with a CIP. The CIP allows the length of a path using PX2 lines to be extended two PICs.

D. The PX1[3:0] lines span a single PIC before intersecting with a CIP. The CIP allows the length of a path using PX1 lines to be extended by one PIC.

E. These are four dedicated direct output lines connected to the output buffers. The DOUT[3:0] signals go directly from a PLC latch/FF to an output buffer, minimizing the latch/FF to pad propagation delay.

F. This is a direct path from the input pad to the PLC latch/flip-flops in the two rows (columns) adjacent to PICs. This input allows a reduced setup time. Direct inputs from the top and bottom PIC rows are PDINTB[3:0]. Direct inputs from the left and right PIC columns are PDINLR[3:0].

G. The OUT[3:0], TS[3:0], and IN[3:0] signals for each I/O pad can be routed directly to the adjacent PLC's switching lines.

H. The four TRIDI buffers allow connections from the pads to the PLC XL lines. The TRIDIs also allow connections between the PLC XL lines and the PBIDI lines, which are described in **J** below.

I. The four TRIDIH buffers allow connections from the pads to the PLC XH lines. The TRIDIHs also allow connections between the PLC XH lines and the pBIDIH lines, which are described in **K** below.

J. The PBIDI lines (bidi[3:0]) connect the PXL lines, PXH lines, and the PX1 lines. These are bidirectional in that the path can be from the PXL, PXH, or PX1 lines to the XL lines, or from the XL lines to the PXL, PXH, or PX1 lines.

K. The pBIDIH lines (BIDIH[3:0]) connect the PXL lines, PXH lines, and the PX1 lines. These are bidirectional in that the path can be from the PXL, PXH, or PX1 lines to the XH lines, or from the XH lines to the PXL, PXH, or PX1 lines.

L. The LLIN[3:0] lines provide a fast connection from the I/O pads to the XL and XH lines.

M. This set of CIPs allows the eight X1 lines (four on each side) of the PLC perpendicular to the PIC to be connected to either the PX1 or PX2 lines in the PIC.

N. This set of CIPs allows the eight X4 lines (four on each side) of the PLC perpendicular to the PIC to be connected to the PX1 lines. This allows fast access to/from the I/O pads from/to the PLCs.

O. All four of the PLC X4 lines in a group connect to all four of the PLC X4 lines in the adjacent PLC through a CIP. (This differs from the *ORCA* 1C Series in which two of the X4 lines in adjacent PLCs are directly connected without any CIPs.)

P. The long-line driver (LLDRV) line can be driven by the XSW4 switching line of the adjacent PLC. To provide connectivity to the pads, the LLDRV line can also connect to any of the four PXH or to one of the PXL lines. The 3-state enable (TS[i]) for all four I/O pads can be driven by XSW4, PXH, or PXL lines.

Q. For fast clock routing, one of the four I/O pads in each PIC can be selected to be driven onto a dedicated clock line. The clock line spans the length (width) of the PLC array. This dedicated clock line is typically used as a clock spine. In the PLCs, the spine is connected to an XL line to provide a clock branch in the perpendicular direction. Since there is another clock line in the PIC on the opposite side of the array, only one of the I/O pads in a given row (column) can be used to generate a global signal in this manner, if all PLCs are driven by the signal.

Programmable Input/Output Cells (continued)

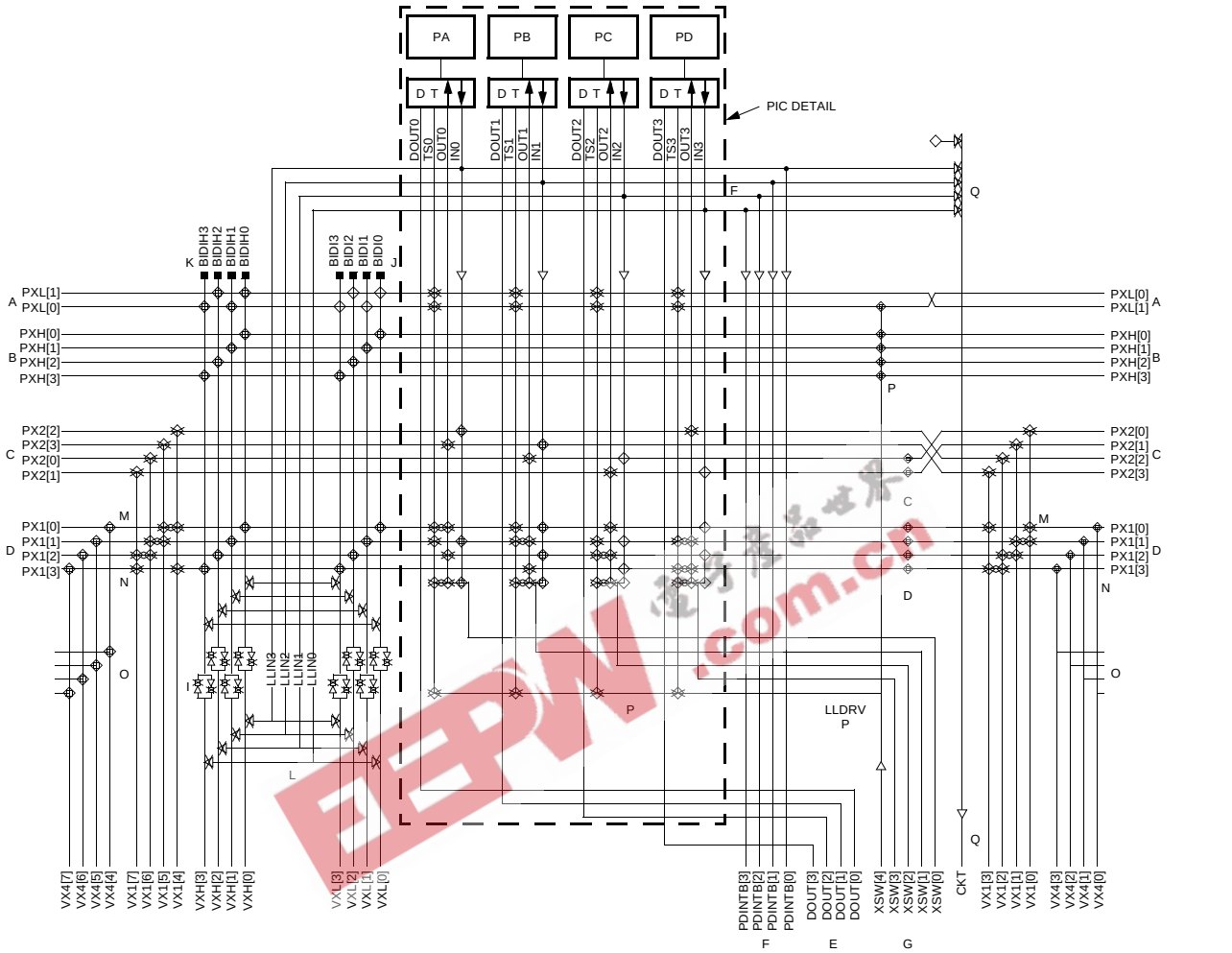

5-2843(F).r8

Figure 26. PIC Architecture

PLC-PIC Routing Resources

There is no direct connection between the inter-PIC lines and the PLC lines. All connections to/from the PLC must be done through the connecting lines which are perpendicular to the lines in the PIC. The use of perpendicular and parallel lines will be clearer if the PLC and PIC architectures (Figure 23 and Figure 26) are placed side by side. Twenty-nine lines in the PLC can be connected to the 15 lines in the PIC.

Multiple connections between the PIC PX1 lines and the PLC X1 lines are available. These allow buses placed in any arbitrary order on the I/O pads to be unscrambled when placed on the PLC X1 lines. Connections are also available between the PIC PX2 lines and the PLC X1 lines.

There are eight tridirectional (four TRIDI/four TRIDIH) buffers in each PIC; they can do the following:

- Drive a signal from an I/O pad onto one of the adjacent PLC's XL or XH lines
- Drive a signal from an I/O pad onto one of the two PXL or four PXH lines in the PIC
- Drive a signal from the PLC XL or XH lines onto one of the two PXL or four PXH lines in the PIC
- Drive a signal from the PIC PXL or PXH lines onto one of the PLC XL or XH lines

Programmable Input/Output Cells

(continued)

Figure 27 shows paths to and from pads and the use of MUX CIPs to connect lines. Detail A shows six MUX CIPs for the pad P0 used to construct the net for the 3-state signal. In the MUX CIP, one of six lines is connected to a line to form the net. In this case, the ts0 signal can be driven by either of the two PXLs, PX1[0], PX1[1], XSW[0], or the LLDRV lines. Detail B shows the four MUX CIPs used to drive the P1 output. The source line for OUT1 is either XSW[1], PX1[1], PX1[3], or PX2[2].

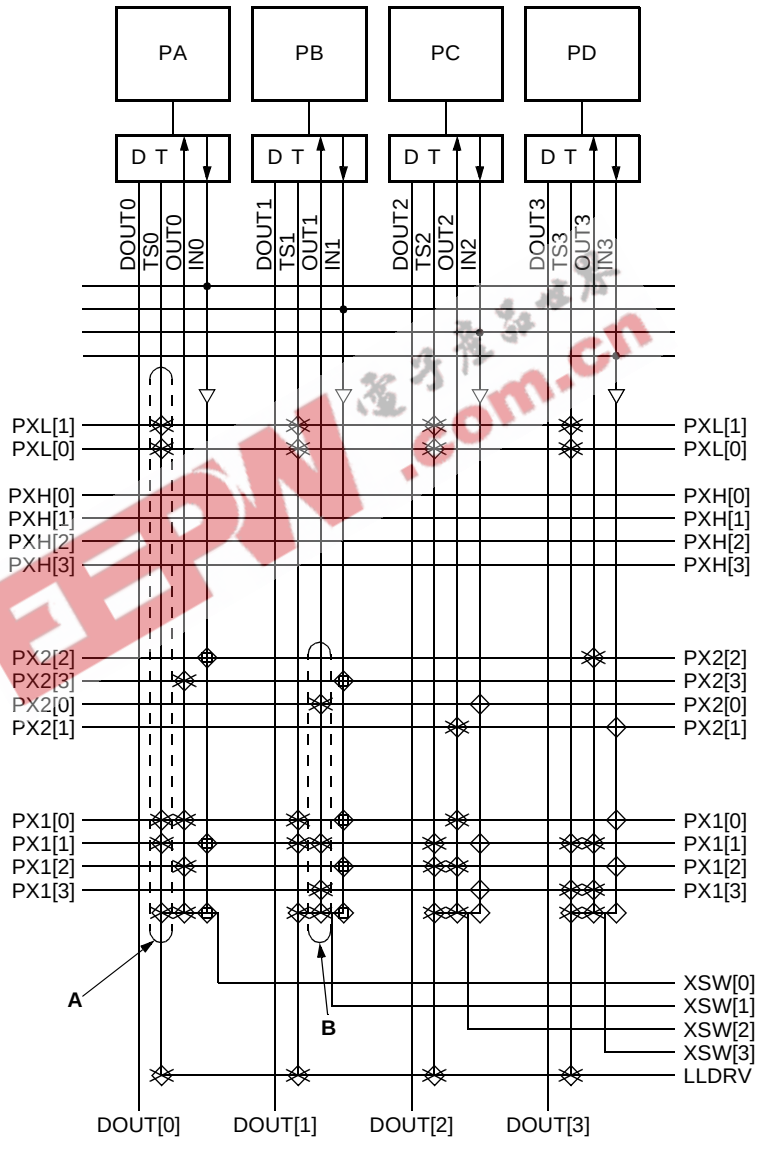

5-2843.BL(F).2C.r3

Figure 27. PIC Detail

Interquad Routing

In all the *ORCA* Series 2 devices, the PLC array is split into four equal quadrants. In between these quadrants, routing has been added to route signals between the quadrants, especially to the quadrant in the opposite corner. The two types of interquad blocks, vertical and horizontal, are pitch matched to PICs. Vertical interquad blocks (vIQ) run between quadrants on the left and right, while horizontal interquad blocks (hIQ) run between top and bottom quadrants. Since hIQ and vIQ blocks have the same logic, only the hIQ block is described below.

The interquad routing connects XL and XH lines. It does not affect local routing (XSW, X1, X4, fast carry), so local routing is the same, whether PLC-PLC connections cross quadrants or not. There are no connections to the local lines in the interquad blocks. Figure 28 presents a (not to scale) view of interquad routing.

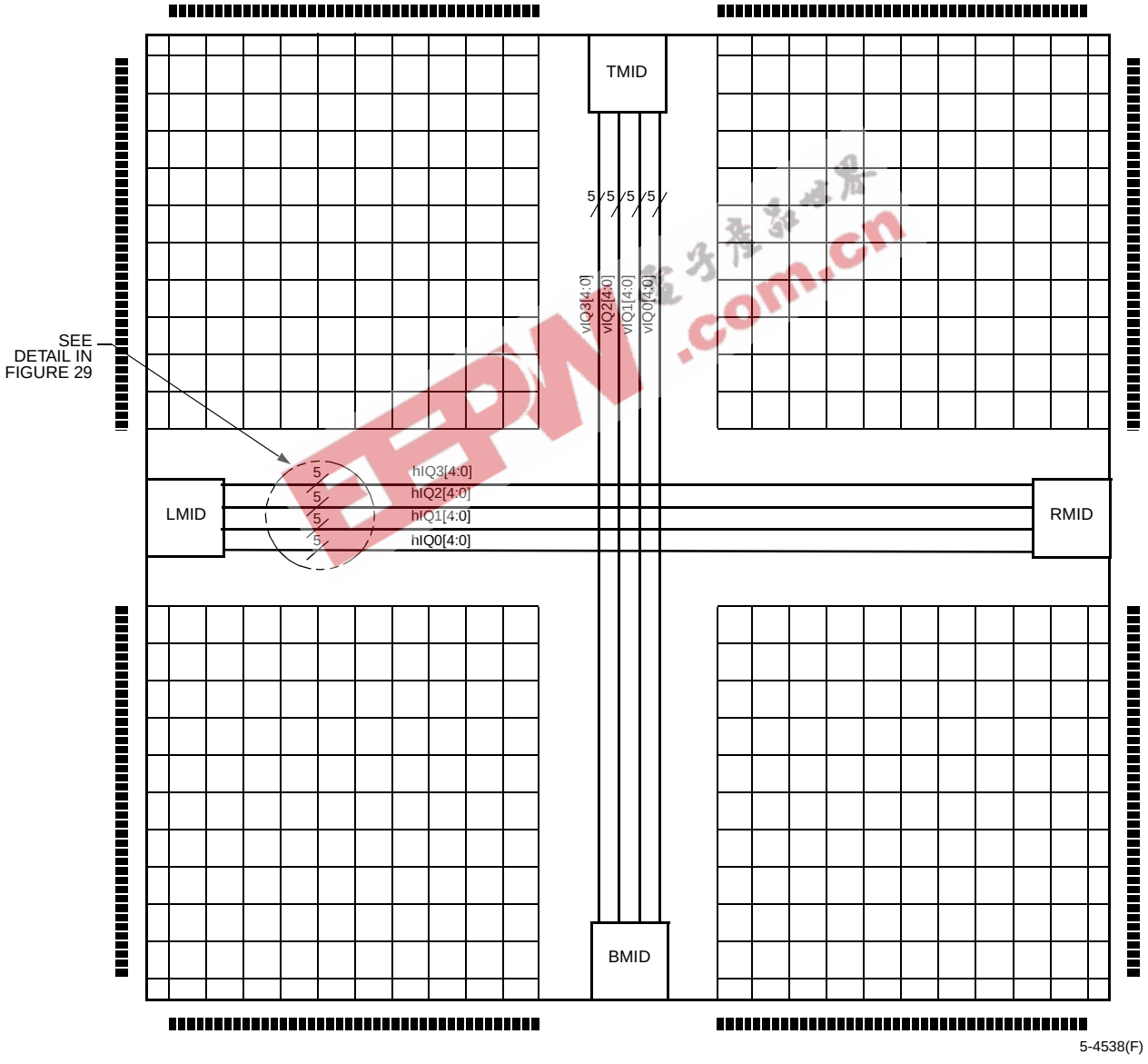

Figure 28. Interquad Routing

Interquad Routing (continued)

In the hIQ block in Figure 29, the XH lines from one quadrant connect through a CIP to its counterpart in the opposite quadrant, creating a path that spans the PLC array. Since a passive CIP is used to connect the two XH lines, a 3-state signal can be routed on the two XH lines in the opposite quadrants, and then they can be connected through this CIP.

In the hIQ block, the 20 hIQ lines span the array in a horizontal direction. The 20 hIQ lines consist of four groups of five lines each. To effectively route nibble-wide buses, each of these sets of five lines can connect to only one of the bits of the nibble for both the XH and XL. For example, hIQ0 lines can only connect to the XH0 and XL0 lines, and the hIQ1 lines can connect only to the XH1 and XL1 lines, etc. Buffers are provided for routing signals from the XH and XL lines onto the hIQ lines and from the hIQ lines onto the XH and XL lines. Therefore, a connection from one quadrant to another can be made using only two XH lines (one in each quadrant) and one interquad line.

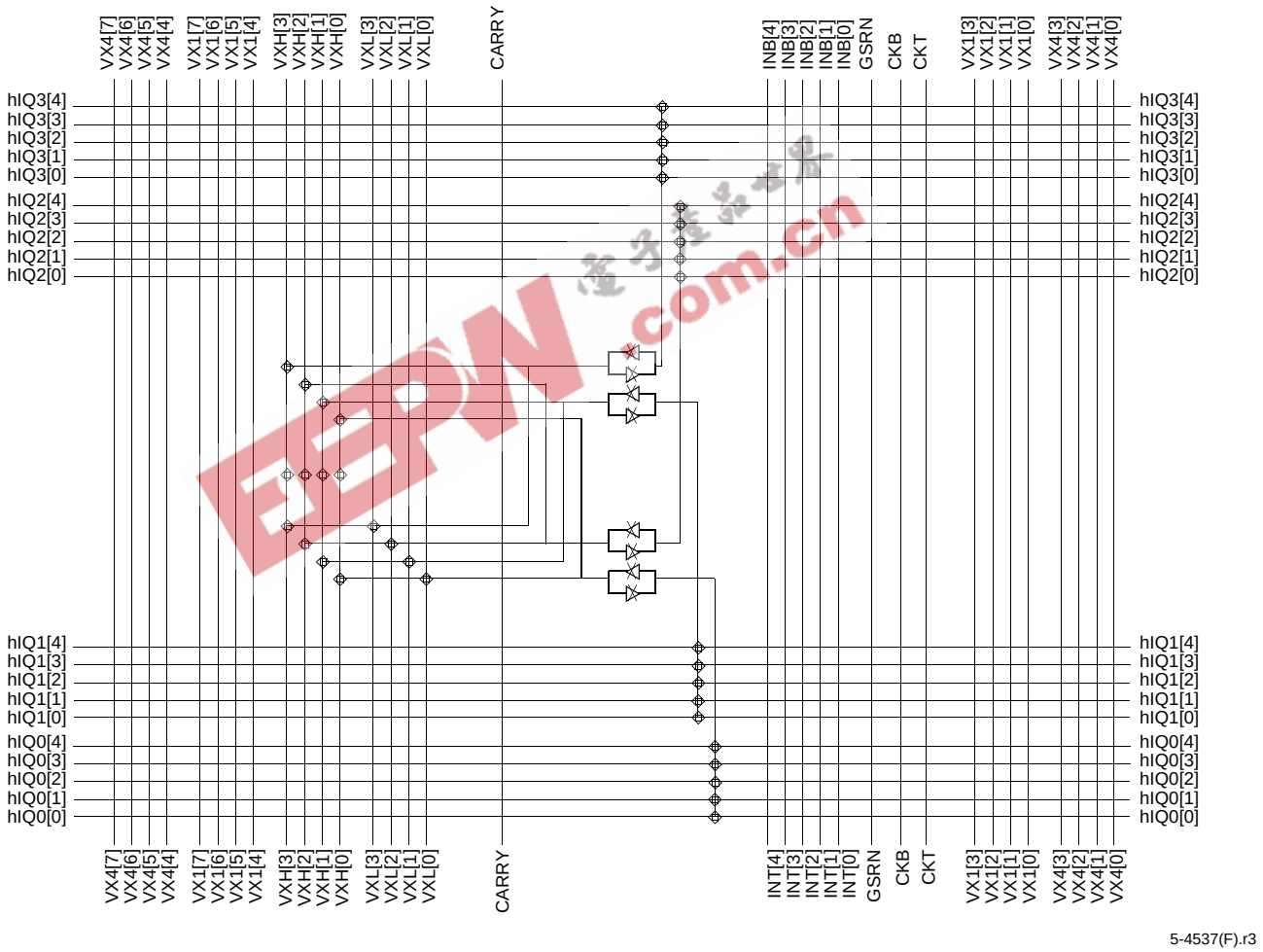

Figure 29. hIQ Block Detail

Interquad Routing (continued)

Subquad Routing (OR2C40A/OR2T40A Only)

In the *ORCA* OR2C40A/OR2T40A/OR2T40B, each quadrant of the device is split into smaller arrays of PLCs called subquads. Each of these subquads is made of a 4 x 4 array of PLCs (for a total of 16 per subquadrant), except at the outer edges of array, which have less than 16 PLCs per subquad. New routing resources, called subquad lines, have been added between each adjacent pair of subquads to enhance the routability of the device. A portion of the center of the OR2C40A and OR2T40A array is shown in Figure 30, including the subquad blocks containing a 4 x 4 array of PLCs, the interquad routing lines, and the subquad routing lines.

All of the inter-PLC routing resources discussed previously continue to be routed between a PLC and its adjacent PLC, even if the two adjacent PLCs are in different subquad blocks. Since the PLC routing has not been modified for the OR2C40A/OR2T40A architectures, this means that all of the same routing connections are possible for these devices as for any other *ORCA* 2C series device. In this way, both the OR2C40A and OR2T40A/OR2T40B are upwardly compatible when compared with the ATT2Cxx series devices. As the inter-PLC routing runs between subquad blocks, it crosses the new subquad lines. When this happens, CIPs are used to connect the subquad lines to the X4 and/or the XH lines which lie along the other axis of the PLC array.

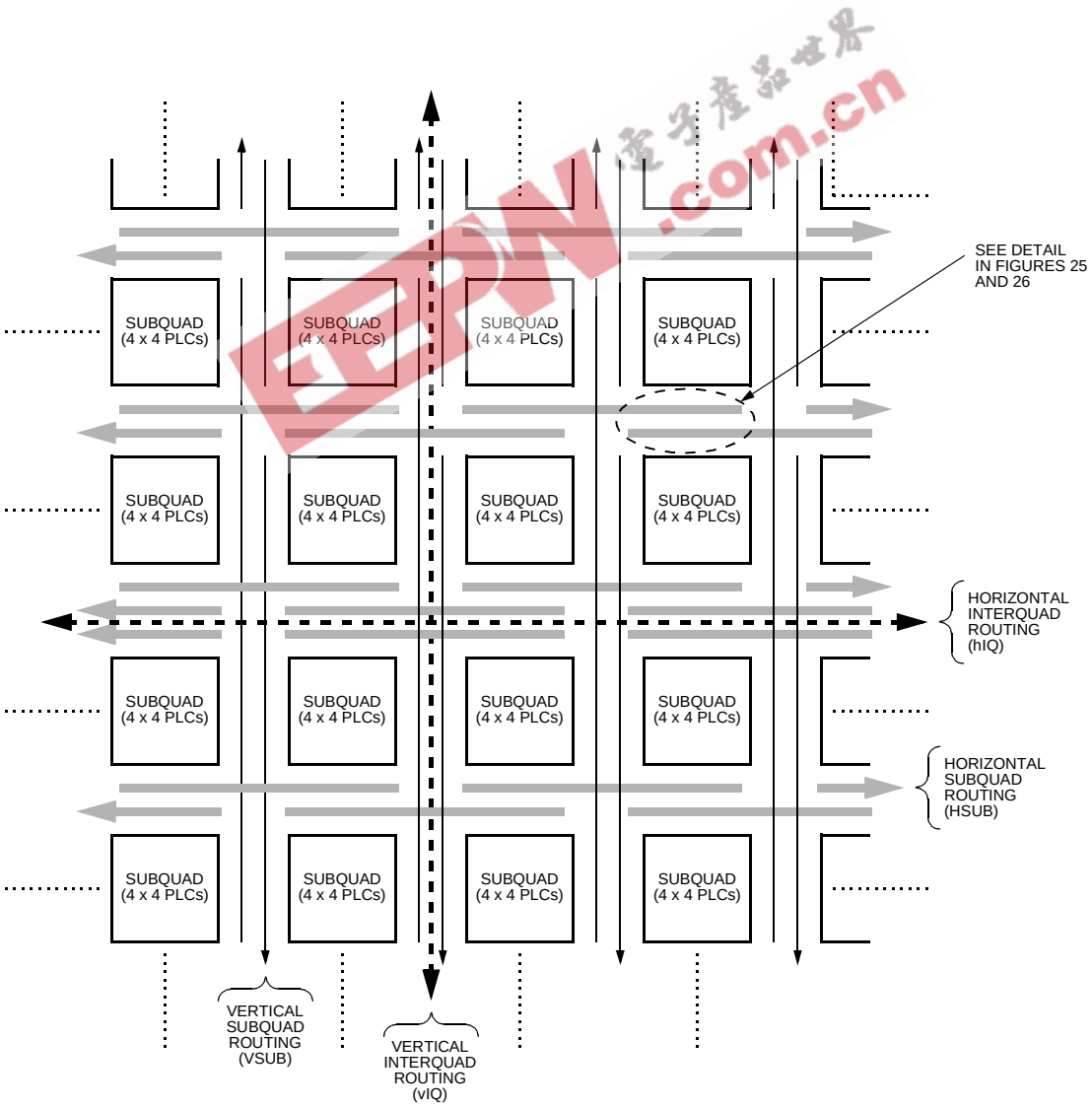

5-4200(F).r5

Figure 30. Subquad Blocks and Subquad Routing

Interquad Routing (continued)

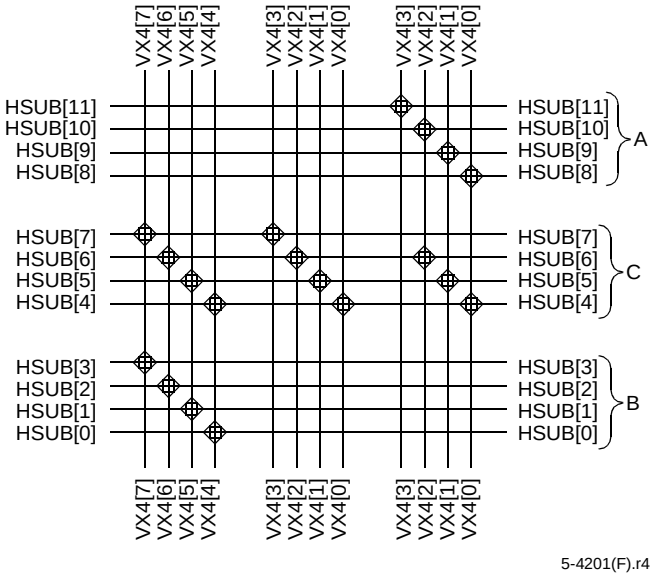

Figure 31. Horizontal Subquad Routing Connectivity

The X4 and XH lines make the only connections to the subquad lines; therefore, the array remains symmetrical and homogeneous. Since each subquad is made from a 4 x 4 array of PLCs, the distance between sets of subquad lines is four PLCs, which is also the distance between the breaks of the X4 lines. Therefore, each X4 line will cross exactly one set of subquad lines. Since all X4 lines make the same connections to the subquad lines that they cross, all X4 lines in the array have the same connectivity, and the symmetry of the routing is preserved. Since all XH lines cross the same number of subquad blocks, the symmetry is maintained for the XH lines as well.

The new subquad lines travel a length of eight PLCs (seven PLCs on the outside edge) before they are broken. Unlike other inter-PLC lines, they cannot be connected end-to-end. As shown in Figure 30, some of the horizontal (vertical) subquad lines have connectivity to the subquad to the left of (above) the current subquad, while others have connectivity to the subquad to the right (below). This allows connections to/from the current subquad from/to the PLCs in all subquads that surround it.

Between all subquads, including in the center of the array, there are three groups of subquad lines where each group contains four lines. Figure 31 shows the connectivity of these three groups of subquad lines (HSUB) to the VX4 and VXH lines running between a vertical pair of PLCs. Between each vertical pair of subquad blocks, four of the blocks shown in Figure 31 are used, one for each pair of vertical PLCs.

The first two groups, depicted as A and B, have connectivity to only one of the two sets of X4 lines between pairs of PLCs. Since they are very lightly loaded, they are very fast. The third group, C, connects to both groups of X4 lines between pairs of PLCs, as well as all of the XH lines between pairs of PLCs, providing high flexibility. The connectivity for the vertical subquad routing (Vsub) is the same as described above for the horizontal subquad routing, when rotated onto the other axis.

At the center row and column of each quadrant, a fourth group of subquad lines has been added. These subquad lines only have connectivity to the XH lines. The XH lines are also broken at this point, which means that each XH line travels one-half of the quadrant (i.e., one-quarter of the device) before it is broken by a CIP. Since the XH lines can be connected end-to-end, the resulting line can be either one-quarter, one-half, three-quarters, or the entire length of the array. The connectivity of the XH lines and this fourth group of subquad lines, indicated as D, are detailed in Figure 32. Again, the connectivity for the vertical subquad routing (VSUB) is the same as the horizontal subquad routing, when rotated onto the other axis.

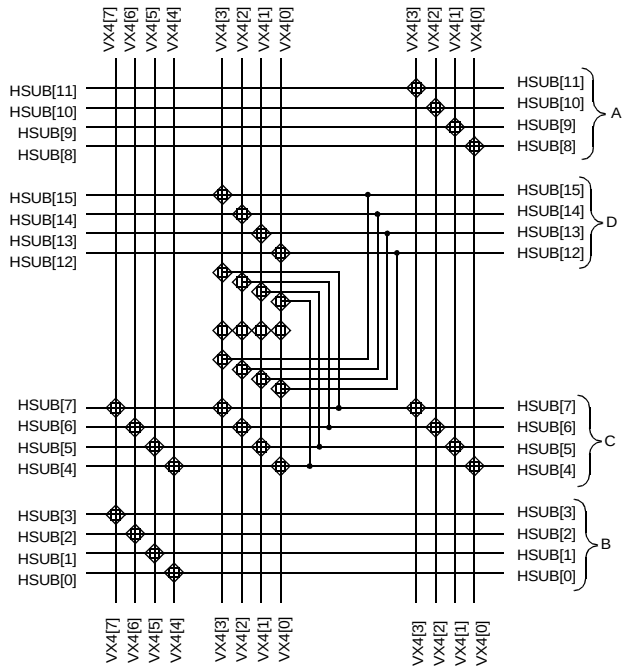

Figure 32. Horizontal Subquad Routing Connectivity (Half Quad)

Interquad Routing (continued)

PIC Interquad (MID) Routing

Between the PICs in each quadrant, there is also connectivity between the PIC routing and the interquad routing. These blocks are called LMID (left), TMID (top), RMID (right), and BMID (bottom). The TMID routing is shown in Figure 33. As with the hIQ and vIQ blocks, the only connectivity to the PIC routing is to the global PXH and PXL lines.

The PXH lines from the one quadrant can be connected through a CIP to its counterpart in the opposite quadrant, providing a path that spans the array of PICs. Since a passive CIP is used to connect the two PXH lines, a 3-state signal can be routed on the two PXH lines in the opposite quadrants, and then connected through this CIP. As with the hIQ and vIQ blocks, CIPs and buffers allow nibble-wide connections between the interquad lines, the XH lines, and the XL lines.

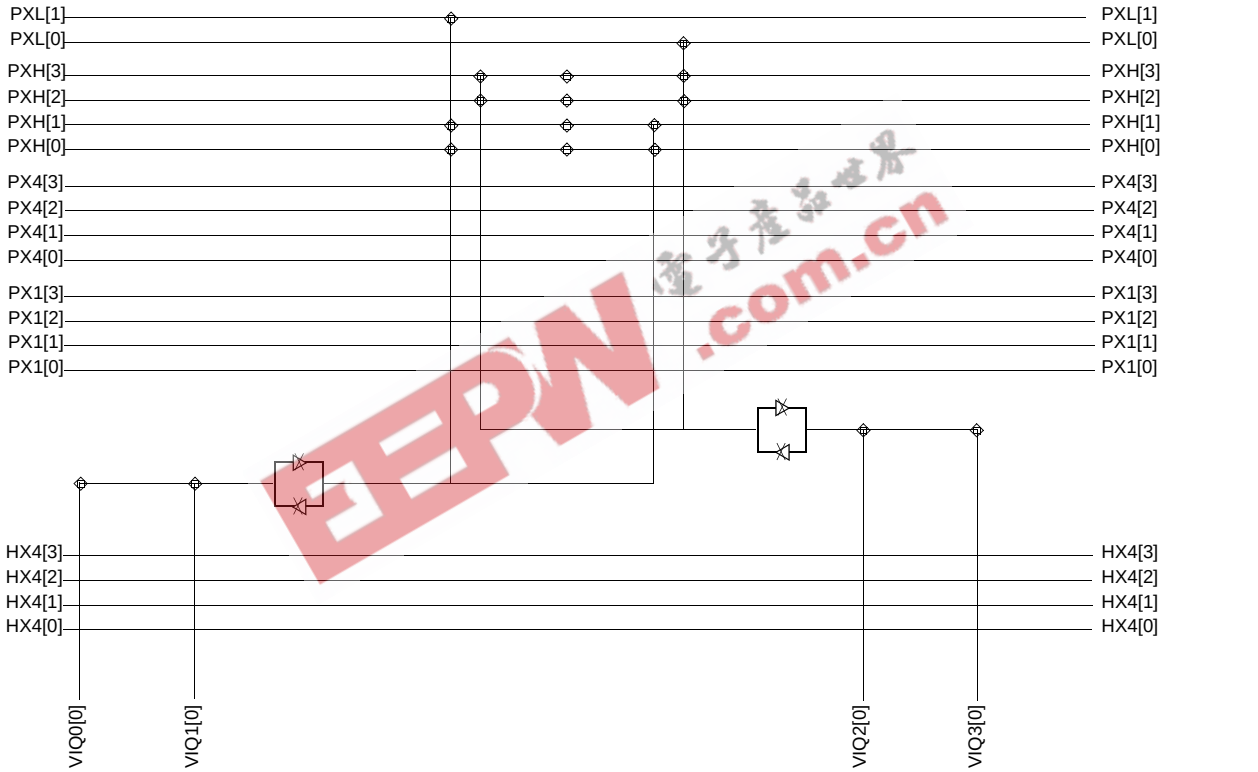

Figure 33. Top (TMID) Routing

Programmable Corner Cells

Programmable Routing

The programmable corner cell (PCC) contains the circuitry to connect the routing of the two PICs in each corner of the device. The PIC PX1 and PX2 lines are directly connected together from one PIC to another. The PIC PXL lines are connected from one block to another through tridirectional buffers. Four CIPs in each corner connect the four PXH lines from each side of the device.

Special-Purpose Functions

In addition to routing functions, special-purpose functions are located in each FPGA corner. The upper-left PCC contains connections to the boundary-scan logic. The upper-right PCC contains connections to the readback logic and the connectivity to the global 3-state signal (TS_ALL). The lower-left PCC contains connections to the internal oscillator.

The lower-right PCC contains connections to the start-up and global reset logic. During configuration, the $\overline{\text{RESET}}$ input pad always initiates a configuration abort, as described in the FPGA States of Operation section. After configuration, the global set/reset signal (GSRN) can either be disabled (the default), directly connected to the $\overline{\text{RESET}}$ input pad, or sourced by a lower-right corner signal. If the $\overline{\text{RESET}}$ input pad is not used as a global reset after configuration, this pad can be used as a normal input pad. During start-up, the release of the global set/reset, the release of the I/Os, and the release of the external DONE signal can each be timed individually based upon the start-up clock. The start-up clock can come from CCLK or it can be routed into the start-up block using the lower-right corner routing resources. More details on start-up can be found in the FPGA States of Operation section.

Clock Distribution Network

The *ORCA* Series 2 clock distribution schemes use primary and secondary clocks. This provides the system designer with additional flexibility in assigning clock input pins.

One advantage is that board-level clock traces routed to the FPGA are shorter. On a PC board, the added length of high-speed clock traces routed to dedicated clock input pins can significantly increase the parasitic impedances. The primary advantage of the *ORCA* clock distribution is the availability of a large number of clocks, since all I/O pins are configurable as clocks.

Primary Clock

The primary clock distribution is shown in Figure 34. If the clock signal is from an I/O pad, it can be driven onto a clock line. The clock lines do not provide clock signals directly to the PFU; they act as clock spines from which clocks are branched to XL lines. The XL lines then feed the clocks to PFUs. A multiplexer in each PLC is used to transition from the clock spine to the branch.

For a clock spine in the horizontal direction, the inputs into the multiplexer are the two lines from the left and right PICs (CKL and CKR) and the local clock line from the perpendicular direction (HCK). This signal is then buffered and driven onto one of the vertical XL lines, forming the branches. The same structure is used for a clock spine in the vertical direction. In this case, the multiplexer selects from lines from the top and bottom PICs (CKT, CKB, and VCK) and drives the signal onto one of the horizontal XL lines.

Figure 34 illustrates the distribution of the low-skew primary clock to a large number of loads using a main spine and branches. Each row (column) has two dedicated clock lines originating from PICs on opposite sides of the array. The clock is input from the pads to the dedicated clock line CKT to form the clock spine (see Figure 34, Detail A). From the clock spine, net branches are routed using horizontal XL lines and then PLC clock inputs are tapped from the XL lines, as shown in Figure 34, Detail B.

Clock Distribution Network (continued)

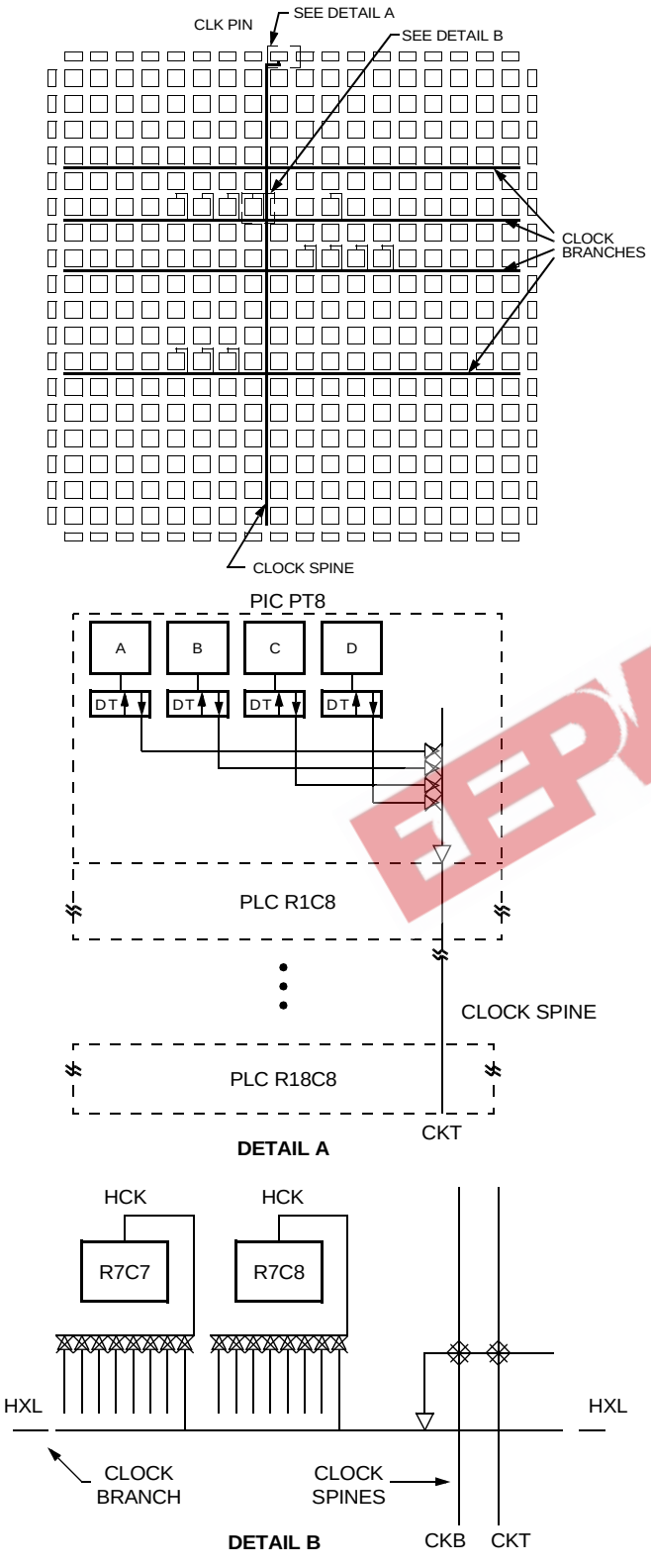

Figure 34. Primary Clock Distribution

Secondary Clock

There are times when a primary clock is either not available or not desired, and a secondary clock is needed. For example:

- Only one input pad per PIC can be placed on the clock routing. If a second input pad in a given PIC requires global signal routing, a secondary clock route must be used.
- Since there is only one branch driver in each PLC for either direction (vertical and horizontal), both clock lines in a particular row or column (CKL and CKR, for example) cannot drive a branch. Therefore, two clocks should not be placed into I/O pads in PICs on the opposite sides of the same row or column if global clocks are to be used.
- Since the clock lines can only be driven from input pads, internally generated clocks should use secondary clock routing.

Figure 35 illustrates the secondary clock distribution. If the clock signal originates from either the left or right side of the FPGA, it can be routed through the TRIDI buffers in the PIC onto one of the adjacent PLC's horizontal XL lines. If the clock signal originates from the top or bottom of the FPGA, the vertical XL lines are used for routing. In either case, an XL line is used as the clock spine. In the same manner, if a clock is only going to be used in one quadrant, the XH lines can be used as a clock spine. The routing of the clock spine from the input pads to the VXL (VXH) using the BIDIs (BIDIHs) is shown in Figure 35, Detail A.

In each PLC, a low-skew connection through a long-line driver can be used to connect a horizontal XL line to a vertical XL line or vice versa. As shown in Figure 35, Detail B, this is used to route the branches from the clock spine. If the clock spine is a vertical XL line, then the branches are horizontal XL lines and vice versa. The clock is then routed into each PLC from the XL line clock branches.

To minimize skew, the PLC clock input for all PLCs must be connected to the branch XL lines, not the spine XL line. Even in PLCs where the clock is routed from the spine to the branches, the clock should be routed back into the PLC from the clock branch.

If the clock is to drive only a limited number of loads, the PFUs can be connected directly to the clock spine. In this case, all flip-flops driven by the clock must be located in the same row or column.

Clock Distribution Network (continued)

Alternatively, the clock can be routed from the spine to the branches by using the BIDIs instead of the long-line drivers. This results in added delay in the clock net, but the clock skew is approximately equal to the clock routed using the long-line drivers. This method can be used to create a clock that is used in only one quadrant. The XH lines act as a clock spine, which is then routed to perpendicular XH lines (the branches) using the BIDIHs.

Clock signals, such as the output of a counter, can also be generated in PLCs and routed onto an XL line, which then acts as a clock spine. Although the clock can be generated in any PLC, it is recommended that the clock be located as close to the center of the FPGA as possible to minimize clock skew.

Selecting Clock Input Pins

Any user I/O pin on an *ORCA* FPGA can be used as a very fast, low-skew clock input. Choosing the first clock pin is completely arbitrary, but using a pin that is near the center of an edge of the device (as shown in Figures 34 and 35) will provide the lowest skew clock network. The pin-to-pin timing numbers in the Timing Characteristics section of this data book assume that the clock pin is in one of the four PICs at the center of any side of the device.

Once the first clock pin has been chosen, there are only two sets of pins (within the center four PICs on each side of the device) that should not be chosen as the second clock pin: a pin from the same PIC, and/or a pin from the PIC on the exact opposite edge of the die (i.e., if a pin from a PIC on the top edge is chosen for the first clock, the same PIC on the bottom edge should not be chosen for the second clock).

These rules should be followed iteratively until a total of eight clocks (or other global signals) have been selected: four from the left/right sides of the device, and four from the top/bottom sides of the device. If more than eight clocks are needed, then select another pin outside the center four PICs to use primary-clock routing, use secondary clock routing for any pin, or use local clock routing.

If it is desired to use a pin for one of the first eight clocks that is not within the center four PICs of any side of the device and primary clock routing is desired, the pad names (see Pin Information) of the two clock pins on the top or bottom of the device **cannot** be a multiplier of four PICs away. The same rule applies to clock pins on the left or right side of the device.

The following equation can be used to determine pin names:

Pad number = P[RL][TB]n ± (i x 4)[A – D]

Where i = 1—8, and n is the current PIC number.

For more information, please refer to *Utilizing the* ORCA® *OR2C/TxxA Clock Distribution Network* Application Note (AP97-055FPGA).

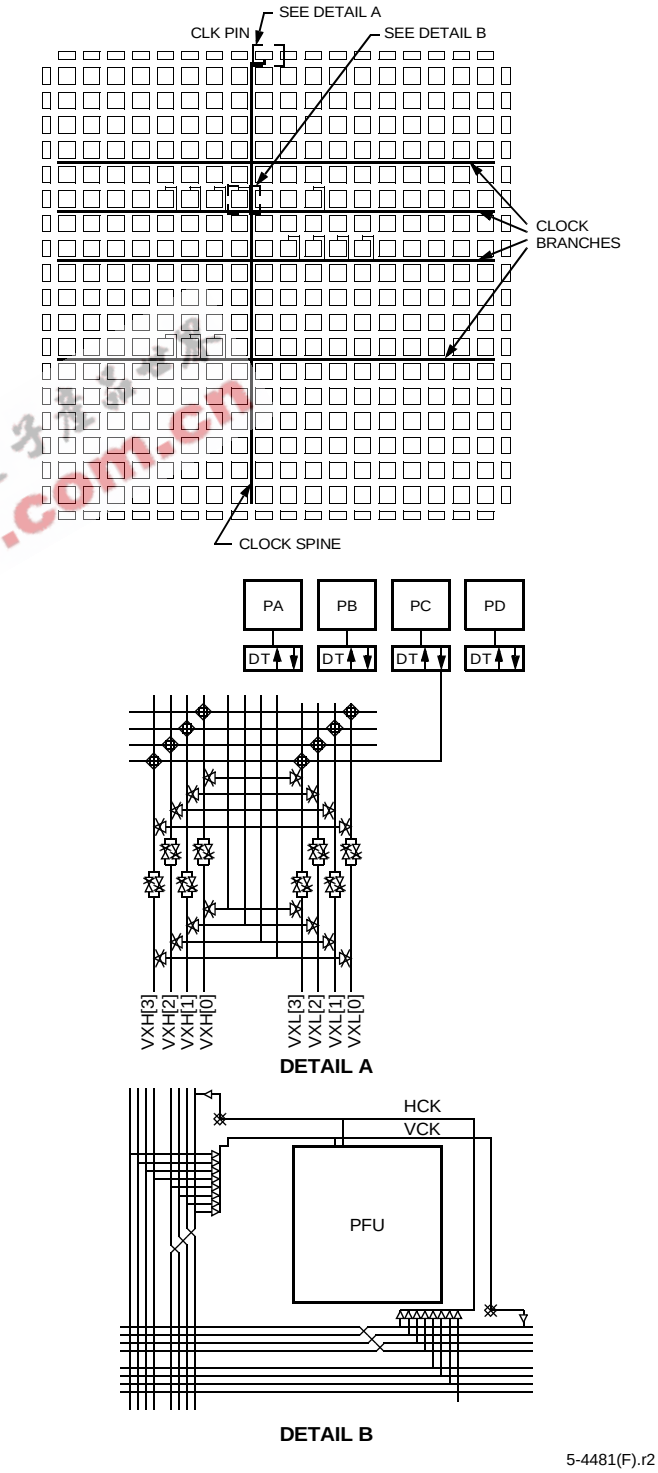

Figure 35. Secondary Clock Distribution

FPGA States of Operation

Prior to becoming operational, the FPGA goes through a sequence of states, including initialization, configuration, and start-up. Figure 36 outlines these three FPGA states.

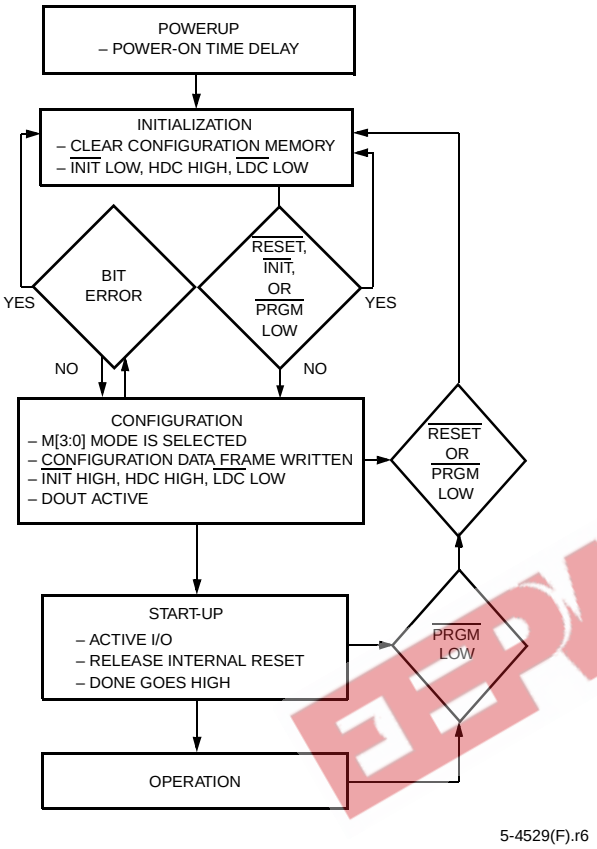

Figure 36. FPGA States of Operation

Initialization

Upon powerup, the device goes through an initialization process. First, an internal power-on-reset circuit is triggered when power is applied. When VDD reaches the voltage at which portions of the FPGA begin to operate (2.5 V to 3 V for the OR2CxxA, 2.2 V to 2.7 V for the OR2TxxA/OR2TxxB), the I/Os are configured based on the configuration mode, as determined by the mode select inputs M[2:0]. A time-out delay is initiated when VDD reaches between 3.0 V and 4.0 V (OR2CxxA) or 2.7 V to 3.0 V (OR2TxxA/2TxxB) to allow the power supply voltage to stabilize. The INIT and DONE outputs are low. At powerup, if VDD does not rise from 2.0 V to VDD in less than 25 ms, the user should delay configuration by inputting a low into INIT, PRGM, or RESET until VDD is greater than the recommended minimum operating voltage (4.75 V for OR2CxxA commercial devices and 3.0 V for OR2TxxA/B devices).

At the end of initialization, the default configuration option is that the configuration RAM is written to a low state. This prevents shorts prior to configuration. As a configuration option, after the first configuration (i.e., at reconfiguration), the user can reconfigure without clearing the internal configuration RAM first.

The active-low, open-drain initialization signal INIT is released and must be pulled high by an external resistor when initialization is complete. To synchronize the configuration of multiple FPGAs, one or more INIT pins should be wire-ANDed. If INIT is held low by one or more FPGAs or an external device, the FPGA remains in the initialization state. INIT can be used to signal that the FPGAs are not yet initialized. After INIT goes high for two internal clock cycles, the mode lines (M[3:0]) are sampled and the FPGA enters the configuration state.

The high during configuration (HDC), low during configuration (LDC), and DONE signals are active outputs in the FPGA's initialization and configuration states. HDC, LDC, and DONE can be used to provide control of external logic signals such as reset, bus enable, or PROM enable during configuration. For parallel master configuration modes, these signals provide PROM enable control and allow the data pins to be shared with user logic signals.

If configuration has begun, an assertion of RESET or PRGM initiates an abort, returning the FPGA to the initialization state. The PRGM and RESET pins must be pulled back high before the FPGA will enter the configuration state. During the start-up and operating states, only the assertion of PRGM causes a reconfiguration.

In the master configuration modes, the FPGA is the source of configuration clock (CCLK). In this mode, the initialization state is extended to ensure that, in daisy-chain operation, all daisy-chained slave devices are ready. Independent of differences in clock rates, master mode devices remain in the initialization state an additional six internal clock cycles after INIT goes high.

When configuration is initiated, a counter in the FPGA is set to 0 and begins to count configuration clock cycles applied to the FPGA. As each configuration data frame is supplied to the FPGA, it is internally assembled into data words. Each data word is loaded into the internal configuration memory. The configuration loading process is complete when the internal length count equals the loaded length count in the length count field, and the required end of configuration frame is written.

FPGA States of Operation (continued)

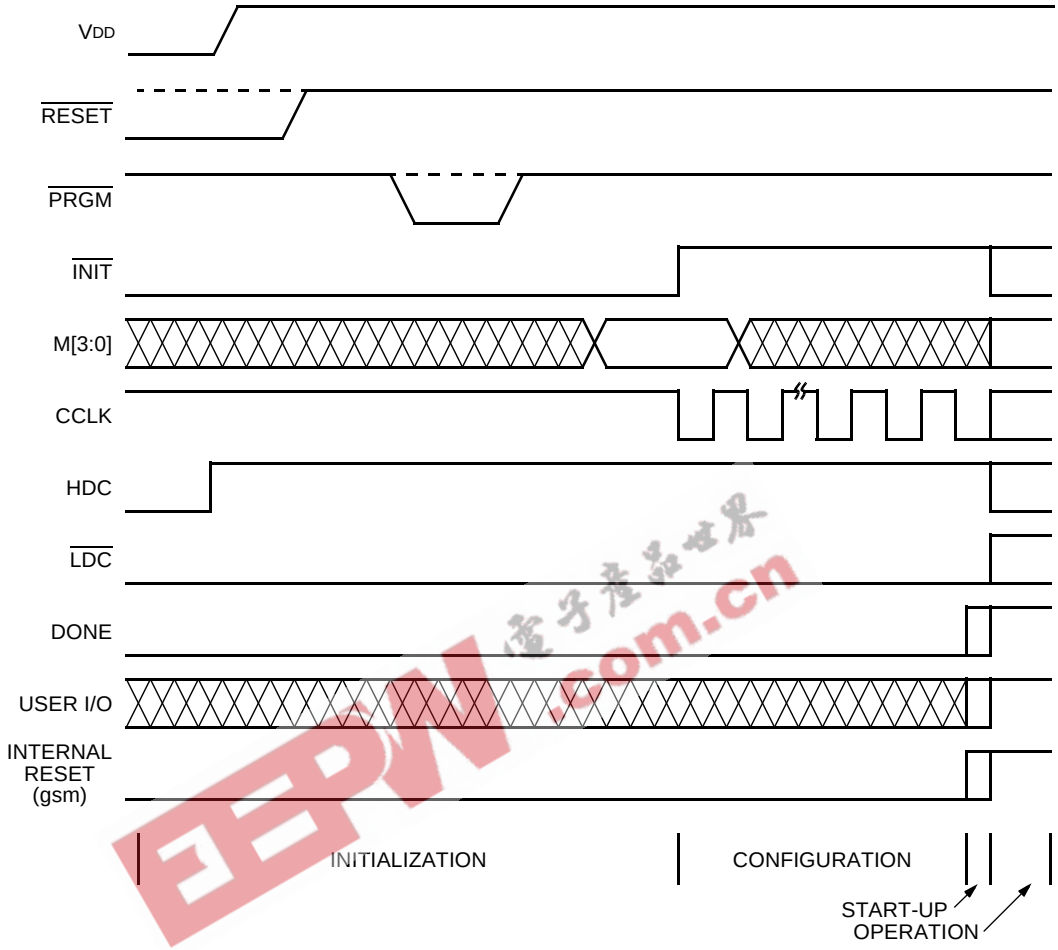

Figure 37. Initialization/Configuration/Start-Up Waveforms

All OR2CxxA I/Os operate as TTL inputs during configuration (OR2TxxA/OR2TxxB I/Os are CMOS-only). All I/Os that are not used during the configuration process are 3-stated with internal pull-ups. During configuration, the PLC latch/FFs are held set/reset and the internal BIDI buffers are 3-stated. The TRIDIs in the PICs are not 3-stated. The combinatorial logic begins to function as the FPGA is configured. Figure 37 shows the general waveform of the initialization, configuration, and start-up states.

Configuration

The *ORCA* Series FPGA functionality is determined by the state of internal configuration RAM. This configuration RAM can be loaded in a number of different modes. In these configuration modes, the FPGA can act as a master or a slave of other devices in the system. The decision as to which configuration mode to use is a system design issue. The next section discusses configuration in detail, including the configuration data format and the configuration modes used to load the configuration data in the FPGA.

FPGA States of Operation (continued)

Start-Up

After configuration, the FPGA enters the start-up phase. This phase is the transition between the configuration and operational states and begins when the number of CCLKs received after $\overline{\text{INIT}}$ goes high is equal to the value of the length count field in the configuration frame and when the end of configuration frame has been written. The system design issue in the start-up phase is to ensure the user I/Os become active without inadvertently activating devices in the system or causing bus contention. A second system design concern is the timing of the release of global set/reset of the PLC latches/FFs.

There are configuration options that control the relative timing of three events: DONE going high, release of the set/reset of internal FFs, and user I/Os becoming active. Figure 38 shows the start-up timing for both the *ORCA* and ATT3000 Series FPGAs. The system designer determines the relative timing of the I/Os becoming active, DONE going high, and the release of the set/reset of internal FFs. In the *ORCA* Series FPGA, the three events can occur in any arbitrary sequence. This means that they can occur before or after each other, or they can occur simultaneously.

There are four main start-up modes: CCLK_NOSYNC, CCLK_SYNC, UCLK_NOSYNC, and UCLK_SYNC. The only difference between the modes starting with CCLK and those starting with UCLK is that for the UCLK modes, a user clock must be supplied to the start-up logic. The timing of start-up events is then based upon this user clock, rather than CCLK. The difference between the SYNC and NOSYNC modes is that, for SYNC mode, the timing of two of the start-up events (release of the set/reset of internal FFs and the I/Os becoming active) is triggered by the rise of the external DONE pin followed by a variable number of rising clock edges (either CCLK or UCLK). For the NOSYNC mode, the timing of these two events is based only on either CCLK or UCLK.

DONE is an open-drain bidirectional pin that may include an optional (enabled by default) pull-up resistor to accommodate wired ANDing. The open-drain DONE signals from multiple FPGAs can be tied together (ANDed) with a pull-up (internal or external) and used as an active-high ready signal, an active-low PROM enable, or a reset to other portions of the system. When used in SYNC mode, these ANDed DONE pins can be used to synchronize the other two start-up events, since they can all be synchronized to the same external signal. This signal will not rise until all FPGAs release their DONE pins, allowing the signal to be pulled high.

The default for *ORCA* is the CCLK_SYNC synchronized start-up mode where DONE is released on the first CCLK rising edge, C1 (see Figure 38). Since this is a synchronized start-up mode, the open-drain DONE signal can be held low externally to stop the occurrence of the other two start-up events. Once the DONE pin has been released and pulled up to a high level, the other two start-up events can be programmed individually to either happen immediately or after up to four rising edges of CCLK (Di, Di + 1, Di + 2, Di + 3, Di + 4). The default is for both events to happen immediately after DONE is released and pulled high.

A commonly used design technique is to release DONE one or more clock cycles before allowing the I/O to become active. This allows other configuration devices, such as PROMs, to be disconnected using the DONE signal so that there is no bus contention when the I/Os become active. In addition to controlling the FPGA during start-up, other start-up techniques that avoid contention include using isolation devices between the FPGA and other circuits in the system, reassigning I/O locations and maintaining I/Os as 3-stated outputs until contentions are resolved.

Each of these start-up options can be selected during bit stream generation in *ORCA* Foundry, using Advanced Options. For more information, please see the *ORCA* Foundry documentation.

Reconfiguration

To reconfigure the FPGA when the device is operating in the system, a low pulse is input into $\overline{\text{PRGM}}$. The configuration data in the FPGA is cleared, and the I/Os not used for configuration are 3-stated. The FPGA then samples the mode select inputs and begins reconfiguration. When reconfiguration is complete, DONE is released, allowing it to be pulled high.

FPGA States of Operation (continued)

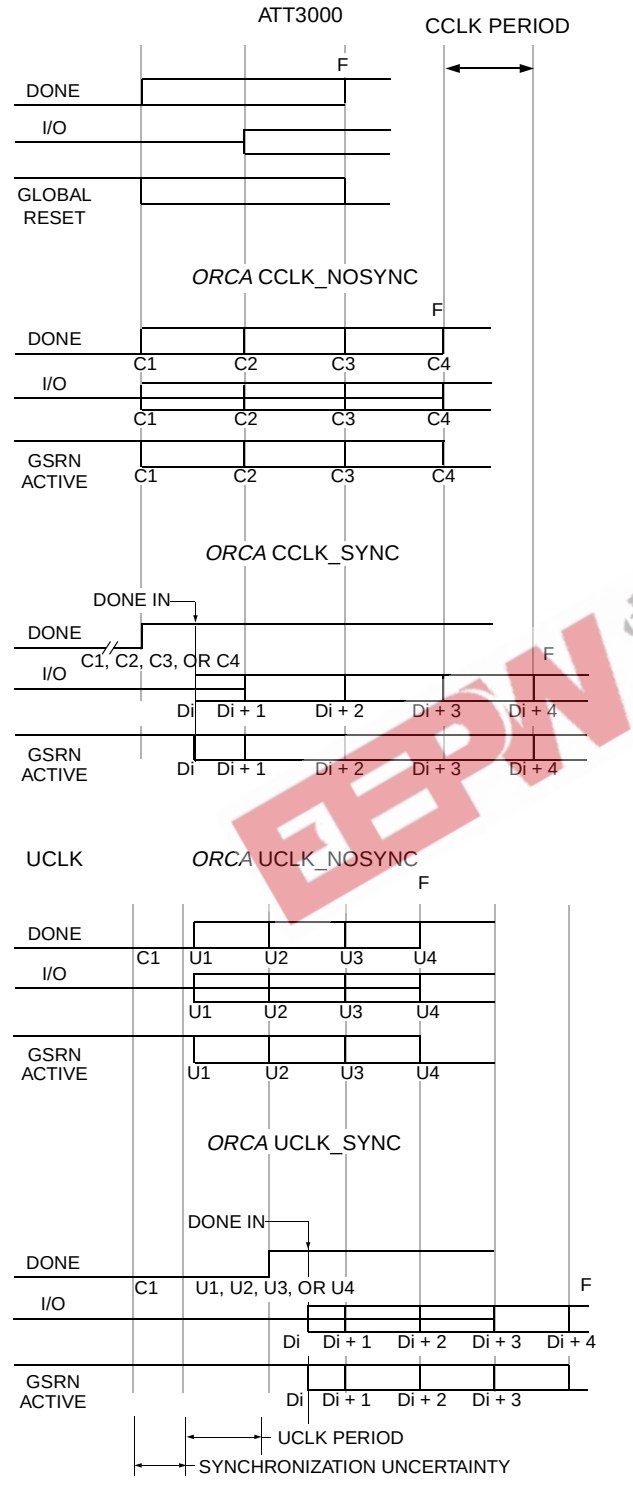

F = finished, no more CLKs required.

5-2761(F).r4

Figure 38. Start-Up Waveforms

Partial Reconfiguration

All *ORCA* device families have been designed to allow a partial reconfiguration of the FPGA at any time. This is done by setting a bit stream option in the previous configuration sequence that tells the FPGA to not reset all of the configuration RAM during a reconfiguration. Then only the configuration frames that are to be modified need to be rewritten, thereby reducing the configuration time.

Other bit stream options are also available that allow one portion of the FPGA to remain in operation while a partial reconfiguration is being done. If this is done, the user must be careful to not cause contention between the two configurations (the bit stream resident in the FPGA and the partial reconfiguration bit stream) as the second reconfiguration bit stream is being loaded.

Other Configuration Options

Configuration options used during device start-up were previously discussed in the FPGA States of Operation section of this data sheet. There are many other configuration options available to the user that can be set during bit stream generation in *ORCA* Foundry. These include options to enable boundary scan, readback options, and options to control and use the internal oscillator after configuration.

Other useful options that affect the next configuration (not the current configuration process) include options to disable the global set/reset during configuration, disable the 3-state of I/Os during configuration, and disable the reset of internal RAMs during configuration to allow for partial configurations (see above). For more information on how to set these and other configuration options, please see the *ORCA* Foundry documentation.

Configuration Data Format

The *ORCA* Foundry Development System interfaces with front-end design entry tools and provides the tools to produce a fully configured FPGA. This section discusses using the *ORCA* Foundry Development System to generate configuration RAM data and then provides the details of the configuration frame format.

The *ORCA* Series 2 series of FPGAs are enhanced versions of the *ORCA* ATT2Cxx/ATT2Txx architectures that provide upward bit stream compatibility for both series of devices as well as with each other.

Configuration Data Format (continued)

Using *ORCA* Foundry to Generate Configuration RAM Data

The configuration data defines the I/O functionality, logic, and interconnections. The bit stream is generated by the development system. The bit stream created by the bit stream generation tool is a series of 1s and 0s used to write the FPGA configuration RAM. The bit stream can be loaded into the FPGA using one of the configuration modes discussed later. In the bit stream generator, the designer selects options which affect the FPGA's functionality. Using the output of the bit stream generator, circuit.bit, the development system's download tool can load the configuration data into the *ORCA* series FPGA evaluation board from a PC or workstation. Alternatively, a user can program a PROM (such as the ATT1700A Series Serial ROM or a standard EPROM) and load the FPGA from the PROM. The development system's PROM programming tool produces a file in .mks or .exo format.

Configuration Data Frame

A detailed description of the frame format is shown in Figure 39. The header frame begins with a series of 1s and a preamble of 0010, followed by a 24-bit length count field representing the total number of configuration clocks needed to complete the loading of the FPGAs. Following the header frame is an optional ID frame. This frame contains data used to determine if the bit stream is being loaded to the correct type of *ORCA* FPGA (i.e., a bit stream generated for an OR2C15A is being sent to an OR2C15A). Since the OR2CxxA devices are bit stream compatible with the ATT2Cxx, ATT2Txx, OR2TxxA, and OR2TxxB families, a bit stream from any of these devices will not cause an error when loaded into an OR2CxxA, OR2TxxA, or OR2TxxB device. The ID frame has a secondary function of optionally enabling the parity checking logic for the rest of the data frames.

The configuration data frames follow. Each frame starts with a 0 start bit and ends with three or more 1 stop bits. Following each start bit are four control bits: a program bit, set to 1 if this is a data frame; a compress bit, set to 1 if this is a compressed frame; and the opar and epar parity bits (see Bit Stream Error Checking). An 11-bit address field that determines in which column the FPGA is to be written is followed by alignment and write control bits. For uncompressed frames, the data bits needed to write one column in the FPGA are next. For compressed frames, the data bits from the previous frame are sent to a different FPGA column, as specified by the new address bits; therefore, new data bits are not required. When configuration of the current FPGA is finished, an end-of-configuration frame (where the program bit is set to 0) is sent to the FPGA. The length and number of data frames and information on the PROM size for the Series 3 FPGAs are given in Table 7.

Table 7. Configuration Frame Size

Devices	OR2C/ 2T04A	OR2C/ 2T06A	OR2C/ 2T08A	OR2C/ 2T10A	OR2C/ 2T12A	OR2C/ 2T15A/B	OR2C/ 2T26A	OR2C/ 2T40A/B
# of Frames	480	568	656	744	832	920	1096	1378
Data Bits/Frame	110	130	150	170	190	210	250	316
Configuration Data (# of frames x # of data bits/frame)	52,800	73,840	98,400	126,480	158,080	193,200	274,000	435,448
Maximum Total # Bits/Frame (align bits, 1 write bit, 8 stop bits)	136	160	176	200	216	240	280	344
Maximum Configuration Data (# bits x # of frames)	65,280	90,880	115,456	148,800	179,712	220,800	306,880	474,032
Maximum PROM Size (bits) (add 48-bit header, ID frame, and 40-bit end of configuration frame)	65,504	91,128	115,720	149,088	180,016	221,128	307,248	474,464

Configuration Data Format (continued)

The data frames for all the Series 2 series devices are given in Table 8. An alignment field is required in the slave parallel mode for the uncompressed format. The alignment field (shown by [A]) is a series of 0s: five for the OR2C06A/OR2T06A, OR2C10A/OR2T10A, OR2C15A/OR2T15A/OR2T15B, and OR2C26A/OR2T26A; three for the OR2C40A/OR2T40A/OR2T40B; and one for the OR2C04A/OR2T04A, OR2C08A/OR2T08A, and OR2C12A/OR2T12A. The alignment field is not required in any other mode.

Table 8. Configuration Data Frames

OR2C04A/OR2T04A	
Uncompressed	010 opar epar [addr10:0] [A]1[Data109:0]111
Compressed	011 opar epar [addr10:0] 111
OR2C06A/OR2T06A	
Uncompressed	010 opar epar [addr10:0] [A]1[Data129:0]111
Compressed	011 opar epar [addr10:0] 111
OR2C08A/OR2T08A	
Uncompressed	010 opar epar [addr10:0] [A]1[Data149:0]111
Compressed	011 opar epar [addr10:0] 111
OR2C10A/OR2T10A	
Uncompressed	010 opar epar [addr10:0] [A]1[Data169:0]111
Compressed	011 opar epar [addr10:0] 111
OR2C12A/OR2T12A	
Uncompressed	010 opar epar [addr10:0] [A]1[Data189:0]111
Compressed	011 opar epar [addr10:0] 111
OR2C15A/OR2T15A/OR2T15B	
Uncompressed	010 opar epar [addr10:0] [A]1[Data209:0]111
Compressed	011 opar epar [addr10:0] 111
OR2C26A/OR2T26A	
Uncompressed	010 opar epar [addr10:0] [A]1[Data249:0]111
Compressed	011 opar epar [addr10:0] 111
OR2C40A/OR2T40A/OR2T40B	
Uncompressed	010 opar epar [addr10:0] [A]1[Data315:0]111
Compressed	011 opar epar [addr10:0] 111

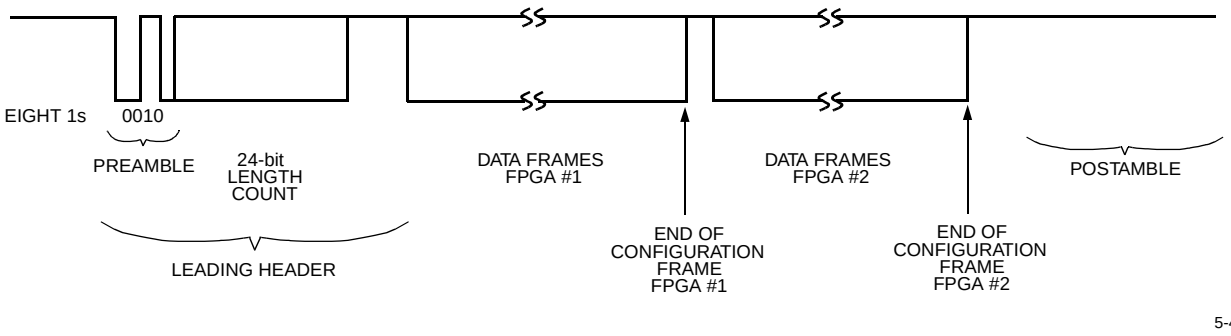

Figure 39. Serial Configuration Data Format

Configuration Data Format (continued)

Table 9. Configuration Frame Format and Contents

Header	11111111	Leading header—4 bits minimum dummy bits
	0010	Preamble
	24-Bit Length Count	Configuration frame length
	1111	Trailing header—4 bits minimum dummy bits
ID Frame (Optional)	0	Frame start
	P—1	Must be set to 1 to indicate data frame
	C—0	Must be set to 0 to indicate uncompressed
	Opar, Epar	Frame parity bits
	Addr[10:0] = 11111111111	ID frame address
	Prty_En	Set to 1 to enable parity
	Reserved [42:0]	Reserved bits set to 0
	ID	20-bit part ID
	111	Three or more stop bits (high) to separate frames
Configuration Data Frame (repeated for each data frame)	0	Frame start
	P—1 or 0	1 indicates data frame; 0 indicates all frames are written
	C—1 or 0	Uncompressed—0 indicates data and address are supplied; Compressed—1 indicates only address is supplied
	Opar, Epar	Frame parity bits
	Addr[10:0]	Column address in FPGA to be written
	A	Alignment bit (different number of 0s needed for each part)
	1	Write bit—used in uncompressed data frame
	Data Bits	Needed only in an uncompressed data frame
	.	.
	.	.
	111	One or more stop bits (high) to separate frames
End of Configuration	0010011111111111	16 bits—00 indicates all frames are written
Postamble	111111	Additional 1s

Note: For slave parallel mode, the byte containing the preamble must be 11110010. The number of leading header dummy bits must be (n * 8) + 4, where n is any nonnegative integer and the number of trailing dummy bits must be (n * 8), where n is any positive integer. The number of stop bits/frame for slave parallel mode must be (x * 8), where x is a positive integer. Note also that the bit stream generator tool supplies a bit stream which is compatible with all configuration modes, including slave parallel mode.

Bit Stream Error Checking

There are three different types of bit stream error checking performed in the *ORCA* Series 2 FPGAs: ID frame, frame alignment, and parity checking.

An optional ID data frame can be sent to a specified address in the FPGA. This ID frame contains a unique code for the part it was generated for which is compared within the FPGA. Any differences are flagged as an ID error. This frame is automatically created by the bit stream generation program in *ORCA* Foundry.

Every data frame in the FPGA begins with a start bit set to 0 and three or more stop bits set to 1. If any of the three previous bits were a 0 when a start bit is encountered, it is flagged as a frame alignment error.

Parity checking is also done on the FPGA for each frame, if it has been enabled by setting the prty_en bit to 1 in the ID frame. This is set by enabling the parity check option in the bit stream generation program of *ORCA* Foundry. Two parity bits, opar and epar, are used to check the parity of bits in alternating bit positions to even parity in each data frame. If an odd number of ones is found for either the even bits (starting with the start bit) or the odd bits (starting with the program bit), then a parity error is flagged.

When any of the three possible errors occur, the FPGA is forced into the INIT state, forcing $\overline{\text{INIT}}$ low. The FPGA will remain in this state until either the $\overline{\text{RESET}}$ or $\overline{\text{PRGM}}$ pins are asserted.

FPGA Configuration Modes

There are eight methods for configuring the FPGA. Seven of the configuration modes are selected on the M0, M1, and M2 inputs. The eighth configuration mode is accessed through the boundary-scan interface. A fourth input, M3, is used to select the frequency of the internal oscillator, which is the source for CCLK in some configuration modes. The nominal frequencies of the internal oscillator are 1.25 MHz and 10 MHz. The 1.25 MHz frequency is selected when the M3 input is unconnected or driven to a high state.

There are three basic FPGA configuration modes: master, slave, and peripheral. The configuration data can be transmitted to the FPGA serially or in parallel bytes. As a master, the FPGA provides the control signals out to strobe data in. As a slave device, a clock is generated externally and provided into CCLK. In the peripheral mode, the FPGA acts as a microprocessor peripheral. Table 10 lists the functions of the configuration mode pins.

Table 10. Configuration Modes

M2	M1	M0	CCLK	Configuration Mode	Data
0	0	0	Output	Master	Serial
0	0	1	Input	Slave Parallel	Parallel
0	1	0	Reserved		
0	1	1	Input	Sync Peripheral	Parallel
1	0	0	Output	Master (up)	Parallel
1	0	1	Output	Async Peripheral	Parallel
1	1	0	Output	Master (down)	Parallel
1	1	1	Input	Slave	Serial

Master Parallel Mode

The master parallel configuration mode is generally used to interface to industry-standard byte-wide memory, such as the 2764 and larger EPROMs. Figure 40 provides the connections for master parallel mode. The FPGA outputs an 18-bit address on A[17:0] to memory and reads one byte of configuration data on the rising edge of RCLK. The parallel bytes are internally serialized starting with the least significant bit, D0.

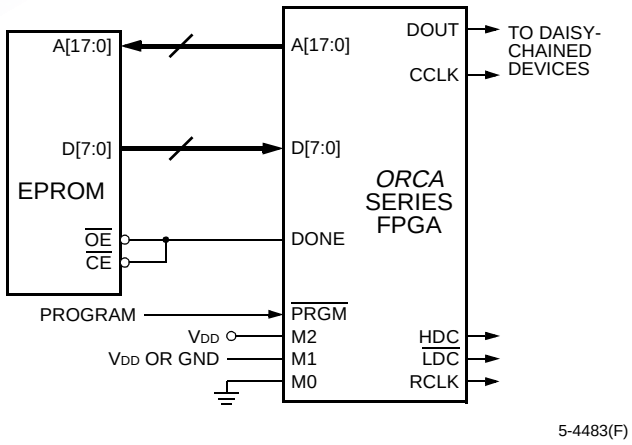

Figure 40. Master Parallel Configuration Schematic

There are two parallel master modes: master up and master down. In master up, the starting memory address is 00000 Hex and the FPGA increments the address for each byte loaded. In master down, the starting memory address is 3FFFF Hex and the FPGA decrements the address.

One master mode FPGA can interface to the memory and provide configuration data on DOUT to additional FPGAs in a daisy chain. The configuration data on DOUT is provided synchronously with the falling edge of CCLK. The frequency of the CCLK output is eight times that of RCLK.

FPGA Configuration Modes (continued)

Master Serial Mode

In the master serial mode, the FPGA loads the configuration data from an external serial ROM. The configuration data is either loaded automatically at start-up or on a $\overline{\text{PRGM}}$ command to reconfigure. The ATT1700 and ATT1700A Series can be used to configure the FPGA in the master serial mode. This provides a simple 4-pin interface in an 8-pin package. The ATT1736, ATT1765, and ATT17128 serial ROMs store 32K, 64K, and 128K bits, respectively.

Configuration in the master serial mode can be done at powerup and/or upon a configure command. The system or the FPGA must activate the serial ROM's $\overline{\text{RESET}}$/OE and $\overline{\text{CE}}$ inputs. At powerup, the FPGA and serial ROM each contain internal power-on reset circuitry that allows the FPGA to be configured without the system providing an external signal. The power-on reset circuitry causes the serial ROM's internal address pointer to be reset. After powerup, the FPGA automatically enters its initialization phase.

The serial ROM/FPGA interface used depends on such factors as the availability of a system reset pulse, availability of an intelligent host to generate a configure command, whether a single serial ROM is used or multiple serial ROMs are cascaded, whether the serial ROM contains a single or multiple configuration programs, etc. Because of differing system requirements and capabilities, a single FPGA/serial ROM interface is generally not appropriate for all applications.

Data is read in the FPGA sequentially from the serial ROM. The DATA output from the serial ROM is connected directly into the DIN input of the FPGA. The CCLK output from the FPGA is connected to the CLOCK input of the serial ROM. During the configuration process, CCLK clocks one data bit on each rising edge.

Since the data and clock are direct connects, the FPGA/serial ROM design task is to use the system or FPGA to enable the $\overline{\text{RESET}}$/OE and $\overline{\text{CE}}$ of the serial ROM(s). There are several methods for enabling the serial ROM's $\overline{\text{RESET}}$/OE and $\overline{\text{CE}}$ inputs. The serial ROM's $\overline{\text{RESET}}$/OE is programmable to function with RESET active-high and $\overline{\text{OE}}$ active-low or $\overline{\text{RESET}}$ active-low and OE active-high.

In Figure 41, serial ROMs are cascaded to configure multiple daisy-chained FPGAs. The host generates a 500 ns low pulse into the FPGA's $\overline{\text{PRGM}}$ input. The FPGA's $\overline{\text{INIT}}$ input is connected to the serial ROM's $\overline{\text{RESET}}$/OE input, which has been programmed to function with $\overline{\text{RESET}}$ active-low and OE active-high.

The FPGA DONE is routed to the $\overline{\text{CE}}$ pin. The low on DONE enables the serial ROMs. At the completion of configuration, the high on the FPGA's DONE disables the serial ROM.

Serial ROMs can also be cascaded to support the configuration of multiple FPGAs or to load a single FPGA when configuration data requirements exceed the capacity of a single serial ROM. After the last bit from the first serial ROM is read, the serial ROM outputs $\overline{\text{CEO}}$ low and 3-states the DATA output. The next serial ROM recognizes the low on $\overline{\text{CE}}$ input and outputs configuration data on the DATA output. After configuration is complete, the FPGA's DONE output into $\overline{\text{CE}}$ disables the serial ROMs.

This FPGA/serial ROM interface is not used in applications in which a serial ROM stores multiple configuration programs. In these applications, the next configuration program to be loaded is stored at the ROM location that follows the last address for the previous configuration program. The reason the interface in Figure 41 will not work in this application is that the low output on the $\overline{\text{INIT}}$ signal would reset the serial ROM address pointer, causing the first configuration to be reloaded.

In some applications, there can be contention on the FPGA's DIN pin. During configuration, DIN receives configuration data, and after configuration, it is a user I/O. If there is contention, an early DONE at start-up (selected in *ORCA* Foundry) may correct the problem. An alternative is to use $\overline{\text{LDC}}$ to drive the serial ROM's $\overline{\text{CE}}$ pin. In order to reduce noise, it is generally better to run the master serial configuration at 1.25 MHz (M3 pin tied high), rather than 10 MHz, if possible.

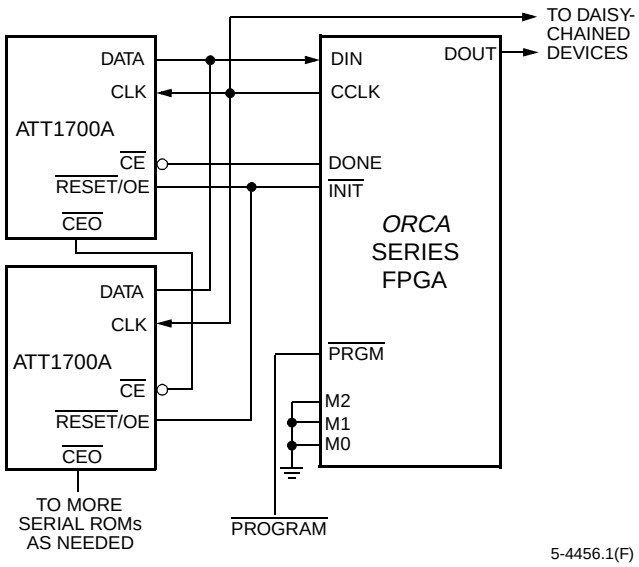

Figure 41. Master Serial Configuration Schematic

FPGA Configuration Modes (continued)

Asynchronous Peripheral Mode

Figure 42 shows the connections needed for the asynchronous peripheral mode. In this mode, the FPGA system interface is similar to that of a microprocessor-peripheral interface. The microprocessor generates the control signals to write an 8-bit byte into the FPGA. The FPGA control inputs include active-low $\overline{CS0}$ and active-high CS1 chip selects, a write $\overline{WR}$ input, and a read $\overline{RD}$ input. The chip selects can be cycled or maintained at a static level during the configuration cycle. Each byte of data is written into the FPGA's D[7:0] input pins.

The FPGA provides a RDY status output to indicate that another byte can be loaded. A low on RDY indicates that the double-buffered hold/shift registers are not ready to receive data, and this pin must be monitored to go high before another byte of data can be written. The shortest time RDY is low occurs when a byte is loaded into the hold register and the shift register is empty, in which case the byte is immediately transferred to the shift register. The longest time for RDY to remain low occurs when a byte is loaded into the holding register and the shift register has just started shifting configuration data into configuration RAM.

The RDY status is also available on the D7 pin by enabling the chip selects, setting $\overline{WR}$ high, and applying $\overline{RD}$ low, where the $\overline{RD}$ input is an output enable for the D7 pin when $\overline{RD}$ is low. The D[6:0] pins are not enabled to drive when $\overline{RD}$ is low and, thus, only act as input pins in asynchronous peripheral mode.

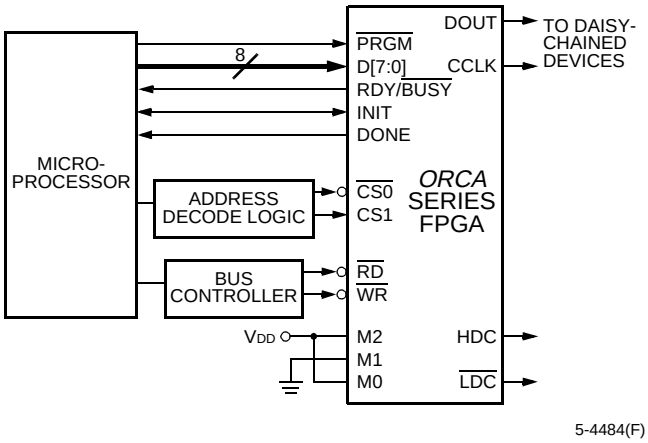

Figure 42. Asynchronous Peripheral Configuration Schematic

Synchronous Peripheral Mode

In the synchronous peripheral mode, byte-wide data is input into D[7:0] on the rising edge of the CCLK input. The first data byte is clocked in on the second CCLK after $\overline{INIT}$ goes high. Subsequent data bytes are clocked in on every eighth rising edge of CCLK. The RDY signal is an output which acts as an acknowledge. RDY goes high one CCLK after data is clocked and, after one CCLK cycle, returns low. The process repeats until all of the data is loaded into the FPGA. The data begins shifting on DOUT 1.5 cycles after it is loaded in parallel. It requires additional CCLKs after the last byte is loaded to complete the shifting. Figure 43 shows the connections for synchronous peripheral mode.

As with master modes, the peripheral modes can be used as the lead FPGA for a daisy chain of slave FPGAs.

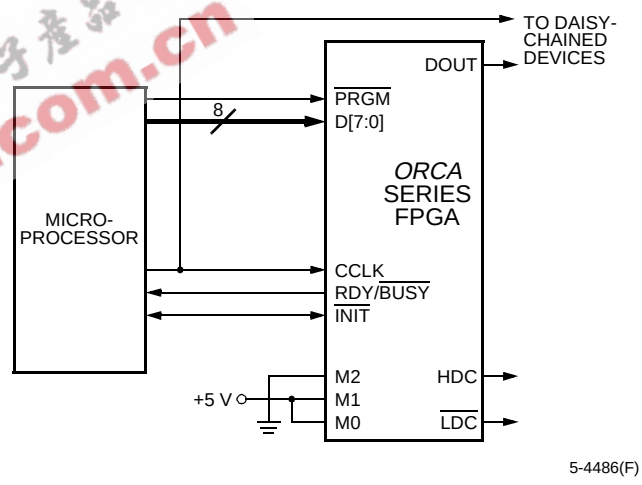

Figure 43. Synchronous Peripheral Configuration Schematic

FPGA Configuration Modes (continued)

Slave Serial Mode

The slave serial mode is primarily used when multiple FPGAs are configured in a daisy chain. The serial slave serial mode is also used on the FPGA evaluation board which interfaces to the download cable. A device in the slave serial mode can be used as the lead device in a daisy chain. Figure 44 shows the connections for the slave serial configuration mode.

The configuration data is provided into the FPGA's DIN input synchronous with the configuration clock CCLK input. After the FPGA has loaded its configuration data, it retransmits the incoming configuration data on DOUT. CCLK is routed into all slave serial mode devices in parallel.

Multiple slave FPGAs can be loaded with identical configurations simultaneously. This is done by loading the configuration data into the DIN inputs in parallel.

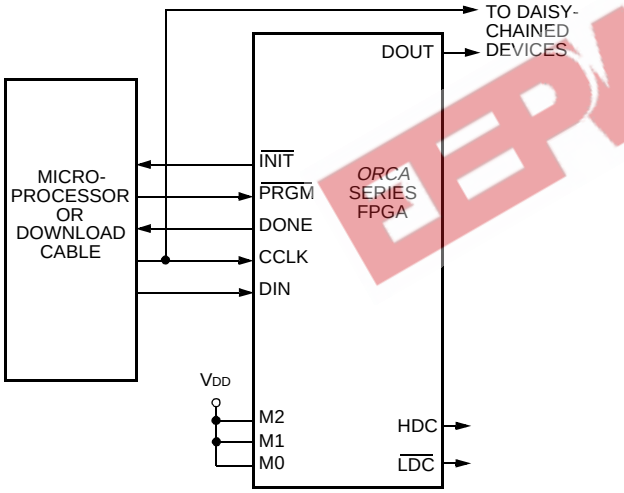

Figure 44. Slave Serial Configuration Schematic

Slave Parallel Mode

The slave parallel mode is essentially the same as the slave serial mode except that 8 bits of data are input on pins D[7:0] for each CCLK cycle. Due to 8 bits of data being input per CCLK cycle, the DOUT pin does not contain a valid bit stream for slave parallel mode. As a result, the lead device cannot be used in the slave parallel mode in a daisy-chain configuration.

Figure 45 is a schematic of the connections for the slave parallel configuration mode. $\overline{WR}$ and $\overline{CS0}$ are active-low chip select signals, and CS1 is an active-high chip select signal. These chip selects allow the user to configure multiple FPGAs in slave parallel mode using an 8-bit data bus common to all of the FPGAs. These chip selects can then be used to select the FPGA(s) to be configured with a given bit stream, but once an FPGA has been selected, it cannot be deselected until it has been completely programmed.

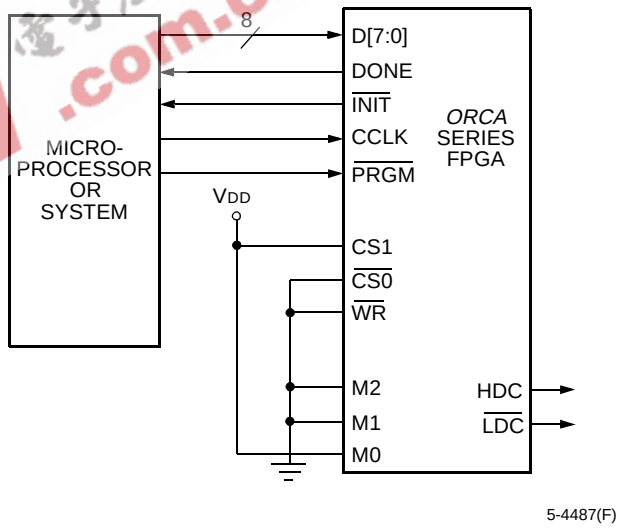

Figure 45. Slave Parallel Configuration Schematic

FPGA Configuration Modes (continued)

Daisy Chain

Multiple FPGAs can be configured by using a daisy chain of the FPGAs. Daisy chaining uses a lead FPGA and one or more FPGAs configured in slave serial mode. The lead FPGA can be configured in any mode except slave parallel mode. (Daisy chaining is not available with the boundary-scan ram_w instruction, discussed later.)

All daisy-chained FPGAs are connected in series. Each FPGA reads and shifts the preamble and length count in on positive CCLK and out on negative CCLK edges.

An upstream FPGA that has received the preamble and length count outputs a high on DOUT until it has received the appropriate number of data frames so that downstream FPGAs do not receive frame start bits (0s). After loading and retransmitting the preamble and length count to a daisy chain of slave devices, the lead device loads its configuration data frames. The loading of configuration data continues after the lead device has received its configuration data if its internal frame bit counter has not reached the length count. When the configuration RAM is full and the number of bits received is less than the length count field, the FPGA shifts any additional data out on DOUT.

The configuration data is read into DIN of slave devices on the positive edge of CCLK, and shifted out DOUT on the negative edge of CCLK. Figure 46 shows the connections for loading multiple FPGAs in a daisy-chain configuration.

The generation of CCLK for the daisy-chained devices which are in slave serial mode differs depending on the configuration mode of the lead device. A master parallel mode device uses its internal timing generator to produce an internal CCLK at eight times its memory address rate (RCLK). The asynchronous peripheral mode device outputs eight CCLKs for each write cycle. If the lead device is configured in either synchronous peripheral or a slave mode, CCLK is routed to the lead device and to all of the daisy-chained devices.

The development system can create a composite configuration bit stream for configuring daisy-chained FPGAs. The frame format is a preamble, a length count for the total bit stream, multiple concatenated data frames, an end-of-configuration frame per device, a postamble, and an additional fill bit per device in the serial chain.

As seen in Figure 46, the $\overline{\text{INIT}}$ pins for all of the FPGAs are connected together. This is required to guarantee that powerup and initialization will work correctly. In general, the DONE pins for all of the FPGAs are also connected together as shown to guarantee that all of the FPGAs enter the start-up state simultaneously. This may not be required, depending upon the start-up sequence desired.

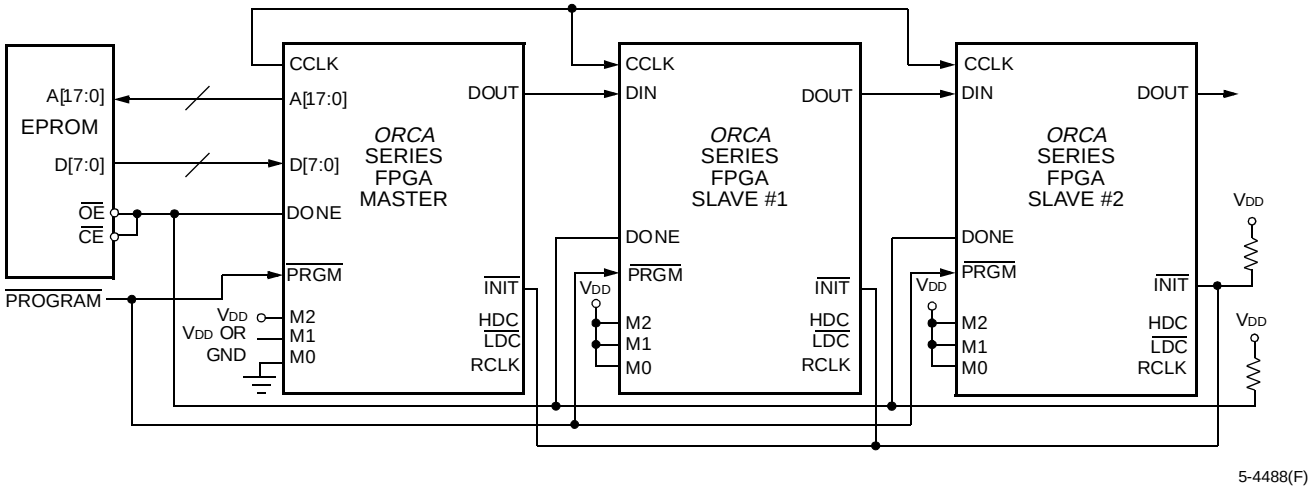

Figure 46. Daisy-Chain Configuration Schematic

Special Function Blocks

Special function blocks in the Series 2 provide extra capabilities beyond general FPGA operation. These blocks reside in the corners of the FPGA array.

Single Function Blocks

Most of the special function blocks perform a specific dedicated function. These functions are data/configuration readback control, global 3-state control (TS_ALL), internal oscillator generation, global set/reset (GSRN), and start-up logic.

Readback Logic

The readback logic is located in the upper right corner of the FPGA.

Readback is used to read back the configuration data and, optionally, the state of the PFU outputs. A readback operation can be done while the FPGA is in normal system operation. The readback operation cannot be daisy-chained. To use readback, the user selects options in the bit stream generator in the *ORCA* Foundry Development System.

Table 11 provides readback options selected in the bit stream generator tool. The table provides the number of times that the configuration data can be read back. This is intended primarily to give the user control over the security of the FPGA's configuration program. The user can prohibit readback (0), allow a single readback (1), or allow unrestricted readback (U).

Table 11. Readback Options

Option	Function
0	Prohibit Readback
1	Allow One Readback Only
U	Allow Unrestricted Number of Readbacks

The pins used for readback are readback data (RD_DATA), read configuration ($\overline{\text{RD\_CFG}}$), and configuration clock (CCLK). A readback operation is initiated by a high-to-low transition on $\overline{\text{RD\_CFG}}$. The $\overline{\text{RD\_CFG}}$ input must remain low during the readback operation. The readback operation can be restarted at frame 0 by driving the $\overline{\text{RD\_CFG}}$ pin high, applying at least two rising edges of CCLK, and then driving $\overline{\text{RD\_CFG}}$ low again. One bit of data is shifted out on RD_DATA at the rising edge of CCLK. The first start bit of the readback frame is transmitted out several cycles after the first rising edge of CCLK after $\overline{\text{RD\_CFG}}$ is input low (see Table 48, Readback Timing Characteristics in the Timing Characteristics section).

It should be noted that the RD_DATA output pin is also used as the dedicated boundary-scan output pin, TDO. If this pin is being used as TDO, the RD_DATA output from readback can be routed internally to any other pin desired. The $\overline{\text{RD\_CFG}}$ input pin is also used to control the global 3-state (TS_ALL) function. Before and during configuration, the TS_ALL signal is always driven by the $\overline{\text{RD\_CFG}}$ input and readback is disabled. After configuration, the selection as to whether this input drives the readback or global 3-state function is determined by a set of bit stream options. If used as the $\overline{\text{RD\_CFG}}$ input for readback, the internal TS_ALL input can be routed internally to be driven by any input pin.

The readback frame contains the configuration data and the state of the internal logic. During readback, the value of all five PFU outputs can be captured. The following options are allowed when doing a capture of the PFU outputs.

1. Do not capture data (the data written to the capture RAMs, usually 0, will be read back).
2. Capture data upon entering readback.
3. Capture data based upon a configurable signal internal to the FPGA. If this signal is tied to logic 0, capture RAMs are written continuously.
4. Capture data on either options 2 or 3 above.

The readback frame has a similar, but not identical, format to the configuration frame. This eases a bitwise comparison between the configuration and readback data. The readback data is not inverted. Every data frame has one low start bit and one high stop bit. The preamble, including the length count field, is not part of the readback frame. The readback frame contains states in locations not used in the configuration. These locations need to be masked out when comparing the configuration and readback frames. The development system optionally provides a readback bit stream to compare to readback from the FPGA. Also note that if any of the LUTs are used as RAM and new data is written to them, these bits will not have the same values as the original configuration data frame either.

Special Function Blocks (continued)

Global 3-State Control (TS_ALL)

The TS_ALL block resides in the upper-right corner of the FPGA array.

To increase the testability of the *ORCA* Series FPGAs, the global 3-state function (TS_ALL) disables the device. The TS_ALL signal is driven from either an external pin or an internal signal. Before and during configuration, the TS_ALL signal is driven by the input pad $\overline{\text{RD\_CFG}}$. After configuration, the TS_ALL signal can be disabled, driven from the $\overline{\text{RD\_CFG}}$ input pad, or driven by a general routing signal in the upper-right corner. Before configuration, TS_ALL is active-low; after configuration, the sense of TS_ALL can be inverted.

The following occur when TS_ALL is activated:

1. All of the user I/O output buffers are 3-stated, the user I/O input buffers are pulled up (with the pull-down disabled), and the input buffers are configured with TTL input thresholds (OR2CxxA only).
2. The TDO/RD_DATA output buffer is 3-stated.
3. The $\overline{\text{RD\_CFG}}$, $\overline{\text{RESET}}$, and $\overline{\text{PRGM}}$ input buffers remain active with a pull-up.
4. The DONE output buffer is 3-stated, and the input buffer is pulled-up.

Internal Oscillator

The internal oscillator resides in the lower-left corner of the FPGA array. It has output clock frequencies of 1.25 MHz and 10 MHz. The internal oscillator is the source of the internal CCLK used for configuration. It may also be used after configuration as a general-purpose clock signal.

Global Set/Reset (GSRN)

The GSRN logic resides in the lower-right corner of the FPGA. GSRN is an invertible, default, active-low signal that is used to reset all of the user-accessible latches/FFs on the device. GSRN is automatically asserted at powerup and during configuration of the device.

The timing of the release of GSRN at the end of configuration can be programmed in the start-up logic described below. Following configuration, GSRN may be connected to the $\overline{\text{RESET}}$ pin via dedicated routing, or it may be connected to any signal via normal routing. Within each PFU, individual FFs and latches can be programmed to either be set or reset when GSRN is asserted.

The $\overline{\text{RESET}}$ input pad has a special relationship to GSRN. During configuration, the $\overline{\text{RESET}}$ input pad always initiates a configuration abort, as described in the FPGA States of Operation section. After configuration, the global set/reset signal (GSRN) can either be disabled (the default), directly connected to the $\overline{\text{RESET}}$ input pad, or sourced by a lower-right corner signal. If the $\overline{\text{RESET}}$ input pad is not used as a global reset after configuration, this pad can be used as a normal input pad.

Start-Up Logic

The start-up logic block is located in the lower right corner of the FPGA. This block can be configured to coordinate the relative timing of the release of GSRN, the activation of all user I/Os, and the assertion of the DONE signal at the end of configuration. If a start-up clock is used to time these events, the start-up clock can come from CCLK, or it can be routed into the start-up block using lower-right corner routing resources. These signals are described in the Start-Up subsection of the FPGA States of Operation section.

Special Function Blocks (continued)

Boundary Scan

The increasing complexity of integrated circuits (ICs) and IC packages has increased the difficulty of testing printed-circuit boards (PCBs). To address this testing problem, the *IEEE* standard 1149.1 - 1990 (*IEEE* Standard Test Access Port and Boundary-Scan Architecture) is implemented in the *ORCA* series of FPGAs. It allows users to efficiently test the interconnection between integrated circuits on a PCB as well as test the integrated circuit itself. The *IEEE* 1149.1 standard is a well-defined protocol that ensures interoperability among boundary-scan (BSCAN) equipped devices from different vendors.

The *IEEE* 1149.1 standard defines a test access port (TAP) that consists of a 4-pin interface with an optional reset pin for boundary-scan testing of integrated circuits in a system. The *ORCA* series FPGA provides four interface pins: test data in (TDI), test mode select (TMS), test clock (TCK), and test data out (TDO). The PRGM pin used to reconfigure the device also resets the boundary-scan logic.

The user test host serially loads test commands and test data into the FPGA through these pins to drive outputs and examine inputs. In the configuration shown in Figure 47, where boundary scan is used to test ICs, test data is transmitted serially into TDI of the first BSCAN device (U1), through TDO/TDI connections between BSCAN devices (U2 and U3), and out TDO of the last BSCAN device (U4). In this configuration, the TMS and TCK signals are routed to all boundary-scan ICs in parallel so that all boundary-scan components operate in the same state. In other configurations, multiple scan paths are used instead of a single ring. When multiple scan paths are used, each ring is independently controlled by its own TMS and TCK signals.

Figure 48 provides a system interface for components used in the boundary-scan testing of PCBs. The three major components shown are the test host, boundary-scan support circuit, and the devices under test (DUTs). The DUTs shown here are *ORCA* Series FPGAs with dedicated boundary-scan circuitry. The test host is normally one of the following: automatic test equipment (ATE), a workstation, a PC, or a microprocessor.

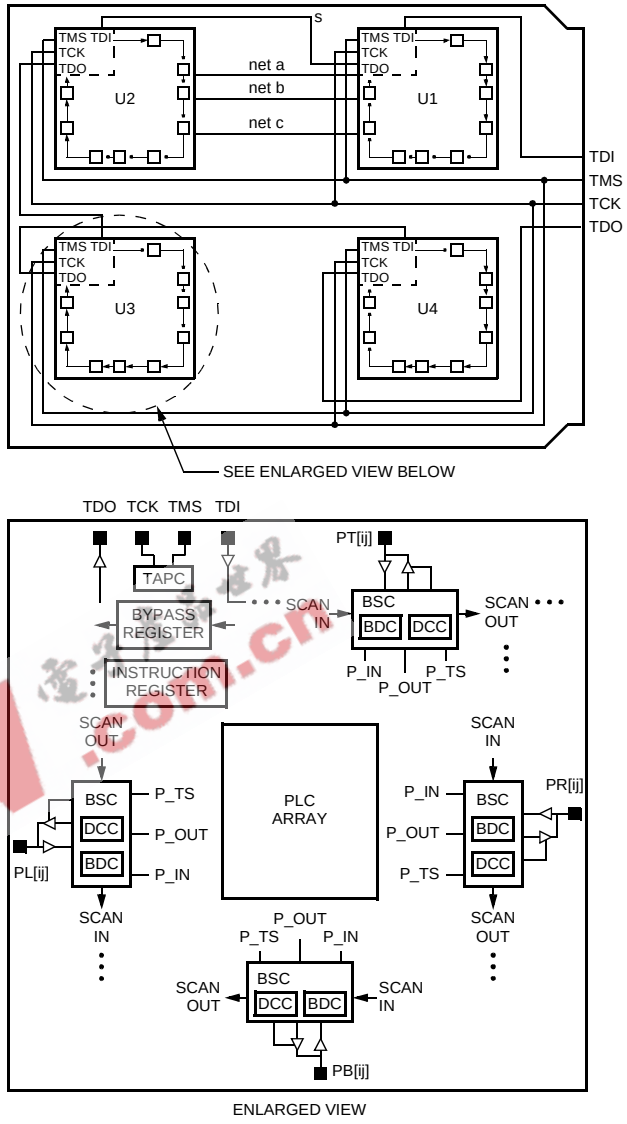

Fig.34.a(F).1C

Key: BSC = boundary-scan cell, BDC = bidirectional data cell, and DCC = data control cell.

Figure 47. Printed-Circuit Board with Boundary-Scan Circuitry

The boundary-scan support circuit shown in Figure 48 is the 497AA Boundary-Scan Master (BSM). The BSM off-loads tasks from the test host to increase test throughput. To interface between the test host and the DUTs, the BSM has a general microprocessor interface and provides parallel-to-serial/serial-to-parallel conversion, as well as three 8K data buffers.

Special Function Blocks (continued)

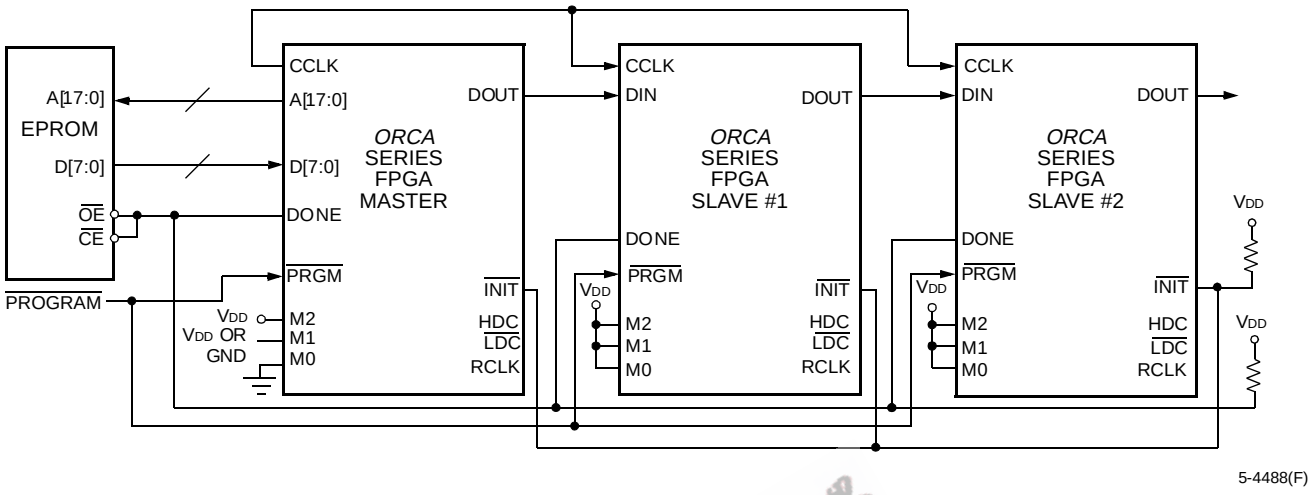

Figure 48. Boundary-Scan Interface

The BSM also increases test throughput with a dedicated automatic test-pattern generator and with compression of the test response with a signature analysis register. The PC-based boundary-scan test card/software allows a user to quickly prototype a boundary-scan test setup.

Boundary-Scan Instructions

The *ORCA* Series boundary-scan circuitry is used for three mandatory *IEEE* 1149.1 tests (EXTEST, SAMPLE/PRELOAD, BYPASS) and four *ORCA*-defined instructions. The 3-bit wide instruction register supports the eight instructions listed in Table 12.

Table 12. Boundary-Scan Instructions

Code	Instruction
000	EXTEST
001	PLC Scan Ring 1
010	RAM Write (RAM_W)
011	Reserved
100	SAMPLE/PRELOAD
101	PLC Scan Ring 2
110	RAM Read (RAM_R)
111	BYPASS

The external test (EXTEST) instruction allows the interconnections between ICs in a system to be tested for opens and stuck-at faults. If an EXTEST instruction is performed for the system shown in Figure 47, the connections between U1 and U2 (shown by nets a, b, and c) can be tested by driving a value onto the given nets from one device and then determining whether the same value is seen at the other device. This is determined by shifting 2 bits of data for each pin (one for the output value and one for the 3-state value) through the BSR until each one aligns to the appropriate pin. Then, based upon the value of the 3-state signal, either the I/O pad is driven to the value given in the BSR, or the BSR is updated with the input value from the I/O pad, which allows it to be shifted out TDO.

The SAMPLE instruction is useful for system debugging and fault diagnosis by allowing the data at the FPGA's I/Os to be observed during normal operation. The data for all of the I/Os is captured simultaneously into the BSR, allowing them to be shifted-out TDO to the test host. Since each I/O buffer in the PICs is bidirectional, two pieces of data are captured for each I/O pad: the value at the I/O pad and the value of the 3-state control signal.

Special Function Blocks (continued)

There are four *ORCA*-defined instructions. The PLC scan rings 1 and 2 (PSR1, PSR2) allow user-defined internal scan paths using the PLC latches/FFs. The RAM_Write Enable (RAM_W) instruction allows the user to serially configure the FPGA through TDI. The RAM_Read Enable (RAM_R) allows the user to read back RAM contents on TDO after configuration.

ORCA Boundary-Scan Circuitry

The *ORCA* Series boundary-scan circuitry includes a test access port controller (TAPC), instruction register (IR), boundary-scan register (BSR), and bypass register. It also includes circuitry to support the four predefined instructions.

Figure 49 shows a functional diagram of the boundary-scan circuitry that is implemented in the *ORCA* series. The input pins' (TMS, TCK, and TDI) locations vary depending on the part, and the output pin is the dedicated TDO/RD_DATA output pad. Test data in (TDI) is the serial input data. Test mode select (TMS) controls the boundary-scan test access port controller (TAPC). Test clock (TCK) is the test clock on the board.

The BSR is a series connection of boundary-scan cells (BSCs) around the periphery of the IC. Each I/O pad on the FPGA, except for CCLK, DONE, and the boundary-scan pins (TCK, TDI, TMS, and TDO), is included in the BSR. The first BSC in the BSR (connected to TDI) is located in the first PIC I/O pad on the left of the top side of the FPGA (PTA PIC). The BSR proceeds clockwise around the top, right, bottom, and left sides of the array. The last BSC in the BSR (connected to TDO) is located on the top of the left side of the array (PLA3).

The bypass instruction uses a single FF which resynchronizes test data that is not part of the current scan operation. In a bypass instruction, test data received on TDI is shifted out of the bypass register to TDO. Since the BSR (which requires a two FF delay for each pad) is bypassed, test throughput is increased when devices that are not part of a test operation are bypassed.

The boundary-scan logic is enabled before and during configuration. After configuration, a configuration option determines whether or not boundary-scan logic is used.

The 32-bit boundary-scan identification register contains the manufacturer's ID number, unique part number, and version, but is not implemented in the *ORCA* series of FPGAs. If boundary scan is not used, TMS, TDI, and TCK become user I/Os, and TDO is 3-stated or used in the readback operation.

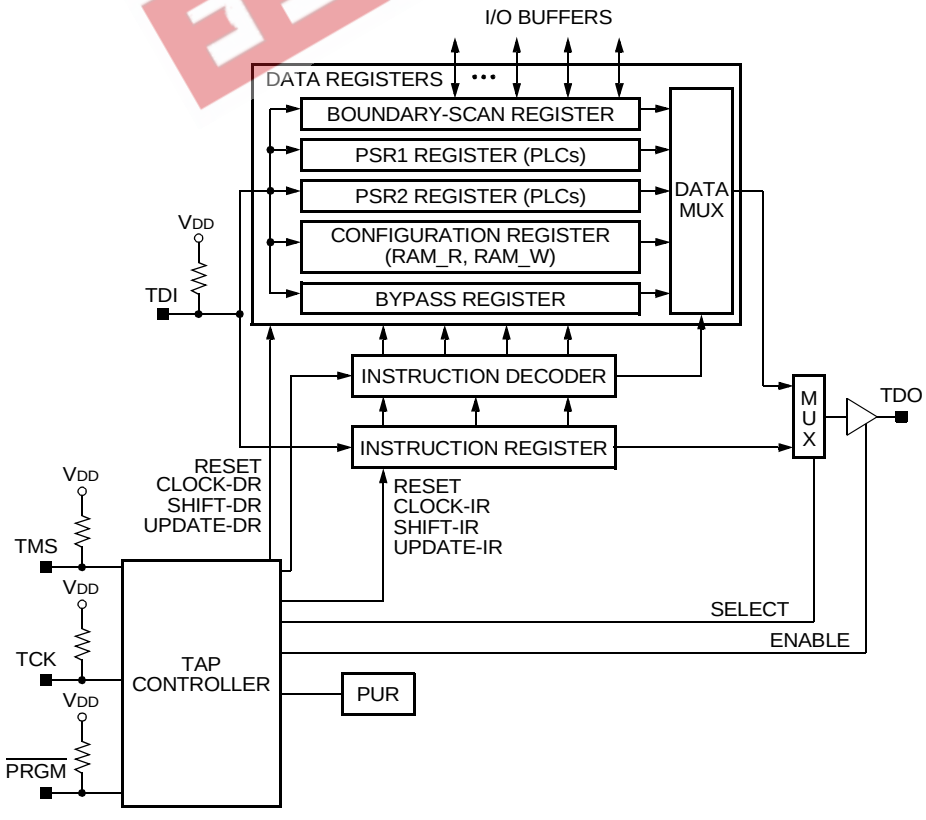

5-2840(C).r7

Figure 49. *ORCA* Series Boundary-Scan Circuitry Functional Diagram

Special Function Blocks (continued)

ORCA Series TAP Controller (TAPC)

The *ORCA* Series TAP controller (TAPC) is a 1149.1 compatible test access port controller. The 16 JTAG state assignments from the *IEEE* 1149.1 specification are used. The TAPC is controlled by TCK and TMS. The TAPC states are used for loading the IR to allow three basic functions in testing: providing test stimuli (Update-DR), test execution (Run-Test/Idle), and obtaining test responses (Capture-DR). The TAPC allows the test host to shift in and out both instructions and test data/results. The inputs and outputs of the TAPC are provided in the table below. The outputs are primarily the control signals to the instruction register and the data register.

Table 13. TAP Controller Input/Outputs

Symbol	I/O	Function
TMS	I	Test Mode Select
TCK	I	Test Clock
PUR	I	Powerup Reset
$\overline{\text{PRGM}}$	I	BSCAN Reset
TRESET	O	Test Logic Reset
Select	O	Select IR (high); Select DR (low)
Enable	O	Test Data Out Enable
Capture-DR	O	Capture/Parallel Load DR
Capture-IR	O	Capture/Parallel Load IR
Shift-DR	O	Shift Data Register
Shift-DR	O	Shift Instruction Register
Update-DR	O	Update/Parallel Load DR
Update-IR	O	Update/Parallel Load IR

The TAPC generates control signals which allow capture, shift, and update operations on the instruction and data registers. In the capture operation, data is loaded into the register. In the shift operation, the captured data is shifted out while new data is shifted in. In the update operation, either the instruction register is loaded for instruction decode, or the boundary-scan register is updated for control of outputs.

The test host generates a test by providing input into the *ORCA* Series TMS input synchronous with TCK. This sequences the TAPC through states in order to perform the desired function on the instruction register or a data register. Figure 50 provides a diagram of the state transitions for the TAPC. The next state is determined by the TMS input value.

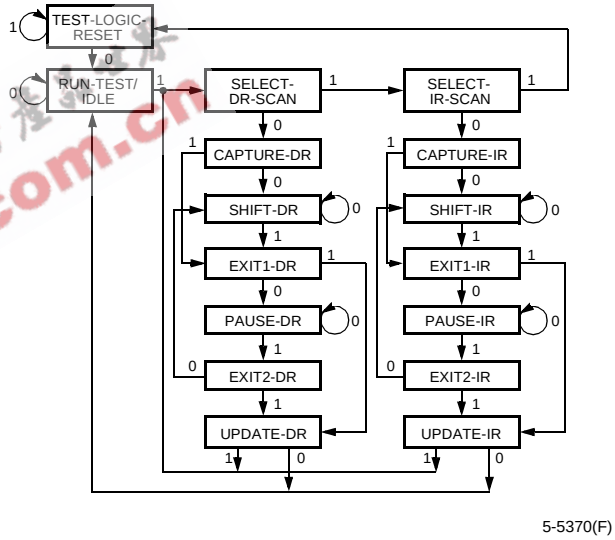

Figure 50. TAP Controller State Transition Diagram

Special Function Blocks (continued)

Boundary-Scan Cells

Figure 51 is a diagram of the boundary-scan cell (BSC) in the *ORCA* series PICs. There are four BSCs in each PIC: one for each pad, except as noted above. The BSCs are connected serially to form the BSR. The BSC controls the functionality of the in, out, and 3-state signals for each pad.

The BSC allows the I/O to function in either the normal or test mode. Normal mode is defined as when an output buffer receives input from the PLC array and provides output at the pad or when an input buffer provides input from the pad to the PLC array. In the test mode, the BSC executes a boundary-scan operation, such as shifting in scan data from an upstream BSC in the BSR, providing test stimuli to the pad, capturing test data at the pad, etc.

The primary functions of the BSC are shifting scan data serially in the BSR and observing input (P_IN), output (P_OUT), and 3-state (P_TS) signals at the pads. The BSC consists of two circuits: the bidirectional data cell is used to access the input and output data, and the direction control cell is used to access the 3-state value. Both cells consist of a flip-flop used to shift scan data which feeds a flip-flop to control the I/O buffer. The bidirectional data cell is connected serially to the direction control cell to form a boundary-scan shift register.

The TAPC signals (capture, update, shiftn, treset, and TCK) and the MODE signal control the operation of the BSC. The bidirectional data cell is also controlled by the high out/low in (HOLI) signal generated by the direction control cell. When HOLI is low, the bidirectional data cell receives input buffer data into the BSC. When HOLI is high, the BSC is loaded with functional data from the PLC.

The MODE signal is generated from the decode of the instruction register. When the MODE signal is high (EXTEST), the scan data is propagated to the output buffer. When the MODE signal is low (BYPASS or SAMPLE), functional data from the FPGA's internal logic is propagated to the output buffer.

The boundary-scan description language (BSDL) is provided for each device in the *ORCA* series of FPGAs. The BSDL is generated from a device profile, pinout, and other boundary-scan information.

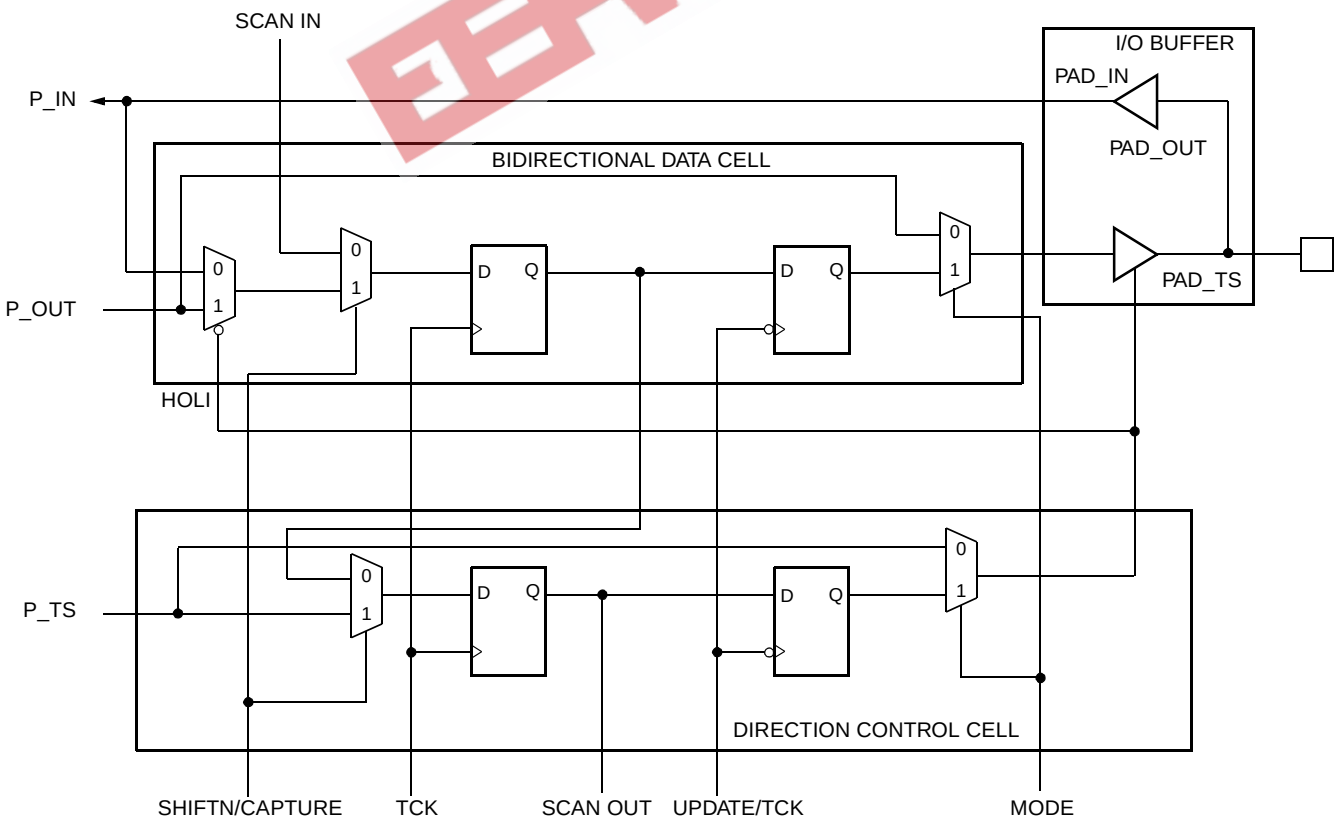

Figure 51. Boundary-Scan Cell

Special Function Blocks (continued)

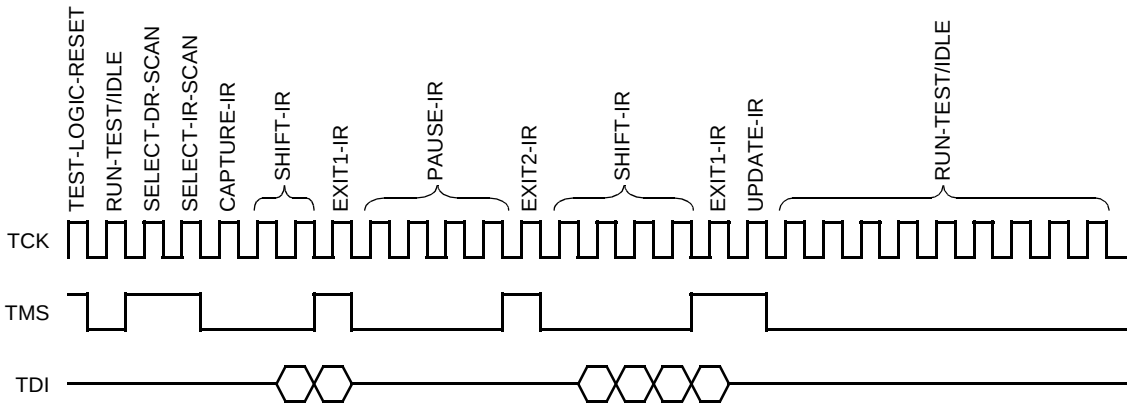

Fig.5.3(F)

Figure 52. Instruction Register Scan Timing Diagram

Boundary-Scan Timing

To ensure race-free operation, data changes on specific clock edges. The TMS and TDI inputs are clocked in on the rising edge of TCK, while changes on TDO occur on the falling edge of TCK. In the execution of an EXTEST instruction, parallel data is output from the BSR to the FPGA pads on the falling edge of TCK. The maximum frequency allowed for TCK is 10 MHz.

Figure 52 shows timing waveforms for an instruction scan operation. The diagram shows the use of TMS to sequence the TAPC through states. The test host (or BSM) changes data on the falling edge of TCK, and it is clocked into the DUT on the rising edge.

ORCA Timing Characteristics

To define speed grades, the *ORCA* Series part number designation (see Table 54) uses a single-digit number to designate a speed grade. This number is not related to any single ac parameter. Higher numbers indicate a faster set of timing parameters. The actual speed sorting is based on testing the delay in a path consisting of an input buffer, combinatorial delay through all PLCs in a row, and an output buffer. Other tests are then done to verify other delay parameters, such as routing delays, setup times to FFs, etc.

The most accurate timing characteristics are reported by the timing analyzer in the *ORCA* Foundry Development System. A timing report provided by the development system after layout divides path delays into logic and routing delays. The timing analyzer can also provide logic delays prior to layout. While this allows routing budget estimates, there is wide variance in routing delays associated with different layouts.

The logic timing parameters noted in the Electrical Characteristics section of this data sheet are the same as those in the design tools. In the PFU timing given in Tables 31—79, symbol names are generally a concatenation of the PFU operating mode (as defined in Table 3) and the parameter type. The wildcard character (*) is used in symbol names to indicate that the parameter applies to any sub-LUT. The setup, hold, and propagation delay parameters, defined below, are designated in the symbol name by the SET, HLD, and DEL characters, respectively.

The values given for the parameters are the same as those used during production testing and speed binning of the devices. The junction temperature and supply voltage used to characterize the devices are listed in the delay tables. Actual delays at nominal temperature and voltage for best-case processes can be much better than the values given.

It should be noted that the junction temperature used in the tables is generally 85 °C. The junction temperature for the FPGA depends on the power dissipated by the device, the package thermal characteristics (Θ_{JA}), and the ambient temperature, as calculated in the following equation and as discussed further in the Package Thermal Characteristics section:

$$T_{Jmax} = T_{Amax} + (P \bullet \Theta_{JA})\ °C$$

Note: The user must determine this junction temperature to see if the delays from *ORCA* Foundry should be derated based on the following derating tables.

Table 14A and 14B and provide approximate power supply and junction temperature derating for OR2CxxA commercial and industrial devices. Table 15A and 15B provides the same information for the OR2TxxA and OR2TxxB devices (both commercial and industrial). The delay values in this data sheet and reported by *ORCA* Foundry are shown as **1.00** in the tables. The method for determining the maximum junction temperature is defined in the Thermal Characteristics section. Taken cumulatively, the range of parameter values for best-case vs. worst-case processing, supply voltage, and junction temperature can approach 3 to 1.

Table 14A. Derating for Commercial Devices (OR2CxxA)

T_J (°C)	Power Supply Voltage		
	4.75 V	**5.0 V**	**5.25 V**
0	0.81	0.79	0.77
25	0.85	0.83	0.81
85	**1.00**	0.97	0.95
100	1.05	1.02	1.00
125	1.12	1.09	1.07

Table 14B. Derating for Industrial Devices (OR2CxxA)

T_J (°C)	Power Supply Voltage				
	4.5 V	**4.75 V**	**5.0 V**	**5.25 V**	**5.5 V**
–40	0.71	0.70	0.68	0.66	0.65
0	0.80	0.78	0.76	0.74	0.73
25	0.84	0.82	0.80	0.78	0.77
85	**1.00**	0.97	0.94	0.93	0.91
100	1.05	1.01	0.99	0.97	0.95
125	1.12	1.09	1.06	1.04	1.02

Table 15A. Derating for Commercial/Industrial Devices (OR2TxxA)

T_J (°C)	Power Supply Voltage		
	3.0 V	**3.3 V**	**3.6 V**
–40	0.73	0.66	0.61
0	0.82	0.73	0.68
25	0.87	0.78	0.72
85	**1.00**	0.90	0.83
100	1.04	0.94	0.87
125	1.10	1.00	0.92

ORCA Timing Characteristics

(continued)

Table 15B. Derating for Commercial/Industrial Devices (OR2TxxB)

T_J (°C)	Power Supply Voltage				
	3.0 V	3.15 V	3.3 V	3.45 V	3.6 V
–40	0.81	0.78	0.76	0.74	0.73
0	0.86	0.83	0.80	0.77	0.76
25	0.9	0.87	0.83	0.8	0.78
85	**1.0**	0.95	0.93	0.88	0.86
100	1.02	0.98	0.95	0.91	0.88
125	1.06	1.03	0.98	0.95	0.92

Note: The derating tables shown above are for a typical critical path that contains 33% logic delay and 66% routing delay. Since the routing delay derates at a higher rate than the logic delay, paths with more than 66% routing delay will derate at a higher rate than shown in the table. The approximate derating values vs. temperature are 0.26% per °C for logic delay and 0.45% per °C for routing delay. The approximate derating values vs. voltage are 0.13% per mV for both logic and routing delays at 25 °C.

In addition to supply voltage, process variation, and operating temperature, circuit and process improvements of the *ORCA* series FPGAs over time will result in significant improvement of the actual performance over those listed for a speed grade. Even though lower speed grades may still be available, the distribution of yield to timing parameters may be several speed bins higher than that designated on a product brand. Design practices need to consider best-case timing parameters (e.g., delays = 0), as well as worst-case timing.

The routing delays are a function of fan-out and the capacitance associated with the CIPs and metal interconnect in the path. The number of logic elements that can be driven (or fan-out) by PFUs is unlimited, although the delay to reach a valid logic level can exceed timing requirements. It is difficult to make accurate routing delay estimates prior to design compilation based on fan-out. This is because the CAE software may delete redundant logic inserted by the designer to reduce fan-out, and/or it may also automatically reduce fan-out by net splitting.

The waveform test points are given in the Measurement Conditions section of this data sheet. The timing parameters given in the electrical characteristics tables in this data sheet follow industry practices, and the values they reflect are described below.

- **Propagation Delay**—the time between the specified reference points. The delays provided are the worst case of the tphh and tpll delays for noninverting functions, tplh and tphl for inverting functions, and tphz and tplz for 3-state enable.
- **Setup Time**—the interval immediately preceding the transition of a clock or latch enable signal, during which the data must be stable to ensure it is recognized as the intended value.
- **Hold Time**—the interval immediately following the transition of a clock or latch enable signal, during which the data must be held stable to ensure it is recognized as the intended value.
- **3-state Enable**—the time from when a TS[3:0] signal becomes active and the output pad reaches the high-impedance state.

Estimating Power Dissipation

OR2CxxA

The total operating power dissipated is estimated by summing the standby (I_{DDSB}), internal, and external power dissipated. The internal and external power is the power consumed in the PLCs and PICs, respectively. In general, the standby power is small and may be neglected. The total operating power is as follows:

$$P_T = \Sigma P_{PLC} + \Sigma P_{PIC}$$

The internal operating power is made up of two parts: clock generation and PFU output power. The PFU output power can be estimated based upon the number of PFU outputs switching when driving an average fan-out of two:

$$P_{PFU} = 0.16 \text{ mW/MHz}$$

For each PFU output that switches, 0.16 mW/MHz needs to be multiplied times the frequency (in MHz) that the output switches. Generally, this can be estimated by using one-half the clock rate, multiplied by some activity factor; for example, 20%.

The power dissipated by the clock generation circuitry is based upon four parts: the fixed clock power, the power/clock branch row or column, the clock power dissipated in each PFU that uses this particular clock, and the power from the subset of those PFUs that is configured in either of the two synchronous modes (SSPM or SDPM). Therefore, the clock power can be calculated for the four parts using the following equations:

OR2C04A Clock Power

P = [0.62 mW/MHz
+ (0.22 mW/MHz – Branch) (# Branches)
+ (0.022 mW/MHz – PFU) (# PFUs)
+ (0.006 mW/MHz – SMEM_PFU)
(# SMEM_PFUs)] fCLK

For a quick estimate, the worst-case (typical circuit) OR2C04A clock power ≈ 3.9 mW/MHz.

Estimating Power Dissipation (continued)

OR2C06A Clock Power

P = [0.63 mW/MHz
+ (0.25 mW/MHz – Branch) (# Branches)
+ (0.022 mW/MHz – PFU) (# PFUs)
+ (0.006 mW/MHz – SMEM_PFU)
(# SMEM_PFUs)] fCLK

For a quick estimate, the worst-case (typical circuit) OR2C06A clock power ≈ 5.3 mW/MHz.

OR2C08A Clock Power

P = [0.65 mW/MHz
+ (0.29 mW/MHz – Branch) (# Branches)
+ (0.022 mW/MHz – PFU) (# PFUs)
+ (0.006 mW/MHz – SMEM_PFU)
(# SMEM_PFUs)] fCLK

For a quick estimate, the worst-case (typical circuit) OR2C08A clock power ≈ 6.6 mW/MHz.

OR2C10A Clock Power

P = [0.66 mW/MHz
+ (0.32 mW/MHz – Branch) (# Branches)
+ (0.022 mW/MHz – PFU) (# PFUs)
+ (0.006 mW/MHz – SMEM_PFU)
(# SMEM_PFUs)] fCLK

For a quick estimate, the worst-case (typical circuit) OR2C10A clock power ≈ 8.6 mW/MHz.

OR2C12A Clock Power

P = [0.68 mW/MHz
+ (0.35 mW/MHz – Branch) (# Branches)
+ (0.022 mW/MHz – PFU) (# PFUs)
+ (0.006 mW/MHz – SMEM_PFU)
(# SMEM_PFUs)] fCLK

For a quick estimate, the worst-case (typical circuit) OR2C12A clock power ≈ 10.5 mW/MHz.

OR2C15A Clock Power

P = [0.69 mW/MHz
+ (0.38 mW/MHz – Branch) (# Branches)
+ (0.022 mW/MHz – PFU) (# PFUs)
+ (0.006 mW/MHz – SMEM_PFU)
(# SMEM_PFUs)] fCLK

For a quick estimate, the worst-case (typical circuit) OR2C15A clock power ≈ 12.7 mW/MHz.

OR2C26A Clock Power

P = [0.73 mW/MHz
+ (0.44 mW/MHz – Branch) (# Branches)
+ (0.022 mW/MHz – PFU) (# PFUs)
+ (0.006 mW/MHz – SMEM_PFU)
(# SMEM_PFUs)] fCLK

For a quick estimate, the worst-case (typical circuit) OR2C26A clock power ≈ 17.8 mW/MHz.

OR2C40A Clock Power

P = [0.77 mW/MHz
+ (0.53 mW/MHz – Branch) (# Branches)
+ (0.022 mW/MHz – PFU) (# PFUs)
+ (0.006 mW/MHz – SMEM_PFU)
(# SMEM_PFUs)] fCLK

For a quick estimate, the worst-case (typical circuit) OR2C40A clock power ≈ 26.6 mW/MHz.

The power dissipated in a PIC is the sum of the power dissipated in the four I/Os in the PIC. This consists of power dissipated by inputs and ac power dissipated by outputs. The power dissipated in each I/O depends on whether it is configured as an input, output, or input/output. If an I/O is operating as an output, then there is a power dissipation component for P_{IN}, as well as P_{OUT}. This is because the output feeds back to the input.

The power dissipated by a TTL input buffer is estimated as:

$$P_{TTL} = 2.2 \text{ mW} + 0.17 \text{ mW/MHz}$$

The power dissipated by an input buffer is estimated as:

$$P_{CMOS} = 0.17 \text{ mW/MHz}$$

The ac power dissipation from an output or bidirectional is estimated by the following:

$$P_{OUT} = (C_L + 8.8 \text{ pF}) \times V_{DD}^2 \times F \text{ Watts}$$

where the unit for C_L is farads, and the unit for F is Hz.

As an example of estimating power dissipation, suppose that a fully utilized OR2C15A has an average of three outputs for each of the 400 PFUs, that all 20 clock branches are used, that 150 of the 400 PFUs have FFs clocked at 40 MHz (16 of which are operating in a synchronous memory mode), and that the PFU outputs have an average activity factor of 20%.

Twenty TTL-configured inputs, 20 CMOS-configured inputs, 32 outputs driving 30 pF loads, and 16 bidirectional I/Os driving 50 pF loads are also generated from the 40 MHz clock with an average activity factor of 20%. The worst-case (V_{DD} = 5.25 V) power dissipation is estimated as follows:

P_{PFU} = 400 x 3 (0.16 mW/MHz x 20 MHz x 20%)
= 768 mW

Estimating Power Dissipation (continued)

P_{CLK} = [0.69 mW/MHz + (0.38 mW/MHz – Branch) (20 Branches) + (0.022 mW/MHz – PFU) (150 PFUs) + (0.006 mW/MHz – SMEM_PFU) (16 SMEM_PFUs)] [40 MHz]
= 427 mW

P_{TTL} = 20 x [2.2 mW + (0.17 mW/MHz x 20 MHz x 20%)]
= 57 mW

P_{CMOS} = 20 x [0.17 mW x 20 MHz x 20%]
= 13 mW

P_{OUT} = 30 x [(30 pF + 8.8 pF) x $(5.25)^2$ x 20 MHz x 20%]
= 128 mW

P_{BID} = 16 x [(50 pF + 8.8 pF) x $(5.25)^2$ x 20 MHz x 20%]
= 104 mW

TOTAL = 1.50 W

OR2TxxA

The total operating power dissipated is estimated by summing the standby (I_{DDSB}), internal, and external power dissipated. The internal and external power is the power consumed in the PLCs and PICs, respectively. In general, the standby power is small and may be neglected. The total operating power is as follows:

$$P_T = \Sigma P_{PLC} + \Sigma P_{PIC}$$

The internal operating power is made up of two parts: clock generation and PFU output power. The PFU output power can be estimated based upon the number of PFU outputs switching when driving an average fan-out of two:

$$P_{PFU} = 0.08 \text{ mW/MHz}$$

For each PFU output that switches, 0.08 mW/MHz needs to be multiplied times the frequency (in MHz) that the output switches. Generally, this can be estimated by using one-half the clock rate, multiplied by some activity factor; for example, 20%.

The power dissipated by the clock generation circuitry is based upon four parts: the fixed clock power, the power/clock branch row or column, the clock power dissipated in each PFU that uses this particular clock, and the power from the subset of those PFUs that is configured in either of the two synchronous modes (SSPM or SDPM). Therefore, the clock power can be calculated for the four parts using the following equations:

OR2T04A Clock Power

P = [0.29 mW/MHz
+ (0.10 mW/MHz – Branch) (# Branches)
+ (0.01 mW/MHz – PFU) (# PFUs)
+ (0.003 mW/MHz – SMEM_PFU) (# SMEM_PFUs)] fCLK

For a quick estimate, the worst-case (typical circuit) OR2T04A clock power ≈ 1.8 mW/MHz.

OR2T06A Clock Power

P = [0.30 mW/MHz
+ (0.11 mW/MHz – Branch) (# Branches)
+ (0.01 mW/MHz – PFU) (# PFUs)
+ (0.003 mW/MHz – SMEM_PFU) (# SMEM_PFUs)] fCLK

For a quick estimate, the worst-case (typical circuit) OR2T06A clock power ≈ 2.4 mW/MHz.

OR2T08A Clock Power

P = [0.31 mW/MHz
+ (0.12 mW/MHz – Branch) (# Branches)
+ (0.01 mW/MHz – PFU) (# PFUs)
+ (0.003 mW/MHz – SMEM_PFU) (# SMEM_PFUs)] fCLK

For a quick estimate, the worst-case (typical circuit) OR2T08A clock power ≈ 3.2 mW/MHz.

OR2T10A Clock Power

P = [0.32 mW/MHz
+ (0.14 mW/MHz – Branch) (# Branches)
+ (0.01 mW/MHz – PFU) (# PFUs)
+ (0.003 mW/MHz – SMEM_PFU) (# SMEM_PFUs)] fCLK

For a quick estimate, the worst-case (typical circuit) OR2T10A clock power ≈ 4.0 mW/MHz.

OR2T12A Clock Power

P = [0.33 mW/MHz
+ (0.15 mW/MHz – Branch) (# Branches)
+ (0.01 mW/MHz – PFU) (# PFUs)
+ (0.003 mW/MHz – SMEM_PFU) (# SMEM_PFUs)] fCLK

For a quick estimate, the worst-case (typical circuit) OR2T12A clock power ≈ 4.9 mW/MHz.

Estimating Power Dissipation (continued)

OR2T15A Clock Power

P = [0.34 mW/MHz
+ (0.17 mW/MHz – Branch) (# Branches)
+ (0.01 mW/MHz – PFU) (# PFUs)
+ (0.003 mW/MHz – SMEM_PFU)
(# SMEM_PFUs)] fCLK

For a quick estimate, the worst-case (typical circuit) OR2T15A clock power ≈ 5.9 mW/MHz.

OR2T26A Clock Power

P = [0.35 mW/MHz
+ (0.19 mW/MHz – Branch) (# Branches)
+ (0.01 mW/MHz – PFU) (# PFUs)
+ (0.003 mW/MHz – SMEM_PFU)
(# SMEM_PFUs)] fCLK

For a quick estimate, the worst-case (typical circuit) OR2T26A clock power ≈ 8.3 mW/MHz.

OR2T40A Clock Power

P = [0.37 mW/MHz
+ (0.23 mW/MHz – Branch) (# Branches)
+ (0.01 mW/MHz – PFU) (# PFUs)
+ (0.003 mW/MHz – SMEM_PFU)
(# SMEM_PFUs)] fCLK

For a quick estimate, the worst-case (typical circuit) OR2T40A clock power ≈ 12.4 mW/MHz.

The power dissipated in a PIC is the sum of the power dissipated in the four I/Os in the PIC. This consists of power dissipated by inputs and ac power dissipated by outputs. The power dissipated in each I/O depends on whether it is configured as an input, output, or input/output. If an I/O is operating as an output, then there is a power dissipation component for P_{IN}, as well as P_{OUT}. This is because the output feeds back to the input.

The power dissipated by an input buffer ($V_{IH} = V_{DD}$ – 0.3 V or higher) is estimated as:

$$P_{IN} = 0.09 \text{ mW/MHz}$$

The 5 V tolerant input buffer feature dissipates additional dc power. The dc power, P_{TOL}, is always dissipated for the OR2TxxA, regardless of the number of 5 V tolerant input buffers used when the $V_{DD}5$ pins are connected to a 5 V supply as shown in Table 16. This power is not dissipated when the $V_{DD}5$ pins are connected to the 3.3 V supply.

Table 16. dc Power for 5 V Tolerant I/Os for OR2TxxA deviced

Device	P_{TOL} ($V_{DD}5$ = 5.25 V)
2T04A	1.7 mW
2T06A	2.0 mW
2T08A	2.4 mW
2T10A	2.7 mW
2T12A	3.0 mW
2T15A	3.4 mW
2T26A	4.0 mW
2T40A	5.0 mW

The ac power dissipation from an output or bidirectional is estimated by the following:

$$P_{OUT} = (C_L + 8.8 \text{ pF}) \times V_{DD}^2 \times F \text{ Watts}$$

where the unit for C_L is farads, and the unit for F is Hz.

As an example of estimating power dissipation, suppose that a fully utilized OR2T15A has an average of three outputs for each of the 400 PFUs, that all 20 clock branches are used, that 150 of the 400 PFUs have FFs clocked at 40 MHz (16 of which are operating in a synchronous memory mode), and that the PFU outputs have an average activity factor of 20%.

Twenty inputs, 32 outputs driving 30 pF loads, and 16 bidirectional I/Os driving 50 pF loads are also generated from the 40 MHz clock with an average activity factor of 20%. The worst-case (V_{DD} = 3.6 V) power dissipation is estimated as follows:

P_{PFU} = 400 x 3 (0.08 mW/MHz x 20 MHz x 20%)
= 384 mW

P_{CLK} = [0.34 mW/MHz + (0.17 mW/MHz – Branch)
(20 Branches)
+ (0.01 mW/MHz – PFU) (150 PFUs)
+ (0.003 mW/MHz – SMEM_PFU)
(16 SMEM_PFUs)] [40 MHz]
= 212 mW

P_{IN} = 20 x [0.09 mW/MHz x 20 MHz x 20%]
= 7 mW

P_{TOL} = 3.4 mW

P_{OUT} = 30 x [(30 pF + 8.8 pF) x $(3.6)^2$ x 20 MHz
x 20%]
= 60 mW

P_{BID} = 16 x [(50 pF + 8.8 pF) x $(3.6)^2$ x 20 MHz
x 20%]
= 49 mW

TOTAL = 0.72 W

Estimating Power Dissipation (continued)

OR2T15B and OR2T40B

The total operating power dissipated is estimated by summing the standby (I_{DDSB}), internal, and external power dissipated. The internal and external power is the power consumed in the PLCs and PICs, respectively. In general, the standby power is small and may be neglected. The total operating power is as follows:

$$P_T = \Sigma P_{PLC} + \Sigma P_{PIC}$$

The internal operating power is made up of two parts: clock generation and PFU output power. The PFU output power can be estimated based upon the number of PFU outputs switching when driving an average fan-out of two:

$$P_{PFU} = 0.08 \text{ mW/MHz}$$

For each PFU output that switches, 0.08 mW/MHz needs to be multiplied times the frequency (in MHz) that the output switches. Generally, this can be estimated by using one-half the clock rate, multiplied by some activity factor; for example, 20%.

The power dissipated by the clock generation circuitry is based upon four parts: the fixed clock power, the power/clock branch row or column, the clock power dissipated in each PFU that uses this particular clock, and the power from the subset of those PFUs that is configured in either of the two synchronous modes (SSPM or SDPM). Therefore, the clock power can be calculated for the four parts using the following equations:

OR2T15B Clock Power

P = [0.30 mW/MHz
+ (0.85 mW/MHz – Branch) (# Branches)
+ (0.008 mW/MHz – PFU) (# PFUs)
+ (0.002 mW/MHz – SMEM_PFU)
(# SMEM_PFUs)] fCLK

For a quick estimate, the worst-case (typical circuit) OR2T15B clock power ≈ 3.9 mW/MHz.

OR2T40B Clock Power

P = [0.42 mW/MHz
+ (0.118 mW/MHz – Branch) (# Branches)
+ (0.008 mW/MHz – PFU) (# PFUs)
+ (0.002 mW/MHz – SMEM_PFU)
(# SMEM_PFUs)] fCLK

For a quick estimate, the worst-case (typical circuit) OR2T40B clock power ≈ 5.5 mW/MHz.

The power dissipated in a PIC is the sum of the power dissipated in the four I/Os in the PIC. This consists of power dissipated by inputs and ac power dissipated by outputs. The power dissipated in each I/O depends on whether it is configured as an input, output, or input/output. If an I/O is operating as an output, then there is a power dissipation component for P_{IN}, as well as P_{OUT}. This is because the output feeds back to the input.

The power dissipated by an input buffer ($V_{IH} = V_{DD} –$ 0.3 V or higher) is estimated as:

$$P_{IN} = 0.033 \text{ mW/MHz}$$

The OR2TxxB 5 V tolerant input buffer feature does not dissipate additional dc power.

The ac power dissipation from an output or bidirectional is estimated by the following:

$$P_{OUT} = (C_L + 8.8 \text{ pF}) \times V_{DD}^2 \times F \text{ Watts}$$

where the unit for C_L is farads, and the unit for F is Hz.

As an example of estimating power dissipation, suppose that a fully utilized OR2T15B has an average of three outputs for each of the 400 PFUs, that all 20 clock branches are used, that 150 of the 400 PFUs have FFs clocked at 40 MHz (16 of which are operating in a synchronous memory mode), and that the PFU outputs have an average activity factor of 20%.

Twenty inputs, 32 outputs driving 30 pF loads, and 16 bidirectional I/Os driving 50 pF loads are also generated from the 40 MHz clock with an average activity factor of 20%. The worst-case (V_{DD} = 3.6 V) power dissipation is estimated as follows:

P_{PFU} = 400 x 3 (0.08 mW/MHz x 20 MHz x 20%)
= 384 mW

P_{CLK} = [0.30 mW/MHz + (0.085 mW/MHz – Branch)
(20 Branches)
+ (0.008 mW/MHz – PFU) (150 PFUs)
+ (0.002 mW/MHz – SMEM_PFU)
(16 SMEM_PFUs)] [40 MHz]
= 129 mW

P_{IN} = 20 x [0.033 mW/MHz x 20 MHz x 20%]
= 3 mW

P_{TOL} = 3.4 mW

P_{OUT} = 30 x [(30 pF + 8.8 pF) x $(3.6)^2$ x 20 MHz
x 20%]
= 60 mW

P_{BID} = 16 x [(50 pF + 8.8 pF) x $(3.6)^2$ x 20 MHz
x 20%]
= 49 mW

TOTAL = 0.72 W

Pin Information

Pin Descriptions

This section describes the pins found on the Series 2 FPGAs. Any pin not described in this table is a user-programmable I/O. During configuration, the user-programmable I/Os are 3-stated with an internal pull-up resistor enabled.

Table 17. Pin Descriptions

Symbol	I/O	Description
Dedicated Pins		
VDD	—	Positive power supply.
GND	—	Ground supply.
I/O-VDD5	—	5 V tolerant select. (For 2TxxA only.) All VDD5 pins must be tied to either the 5 V power supply if 5 V tolerant I/O buffers are to be used, or to the 3.3 V power supply (VDD) if they are not. For 2CxxA and 2TxxB devices, these pins are user-programmable I/Os.
$\overline{\text{RESET}}$	I	During configuration, $\overline{\text{RESET}}$ forces the restart of configuration and a pull-up is enabled. After configuration, $\overline{\text{RESET}}$ can be used as a general FPGA input or as a direct input, which causes all PLC latches/FFs to be asynchronously set/reset.
CCLK	I	In the master and asynchronous peripheral modes, CCLK is an output which strobes configuration data in. In the slave or synchronous peripheral mode, CCLK is input synchronous with the data on DIN or D[7:0].
DONE	I/O	DONE is a bidirectional pin with an optional pull-up resistor. As an active-high, open-drain output, a high-level on this signal indicates that configuration is complete. As an input, a low level on DONE delays FPGA start-up after configuration*.
$\overline{\text{PRGM}}$	I	$\overline{\text{PRGM}}$ is an active-low input that forces the restart of configuration and resets the boundary-scan circuitry. This pin always has an active pull-up.
$\overline{\text{RD\_CFG}}$	I	This pin must be held high during device initialization until the $\overline{\text{INIT}}$ pin goes high. This pin always has an active pullup. During configuration, $\overline{\text{RD\_CFG}}$ is an active-low input that activates the TS_ALL function and 3-states all of the I/O. After configuration, $\overline{\text{RD\_CFG}}$ can be selected (via a bit stream option) to activate the TS_ALL function as described above, or, if readback is enabled via a bit stream option, a high-to-low transition on $\overline{\text{RD\_CFG}}$ will initiate readback of the configuration data, including PFU output states, starting with frame address 0.
RD_DATA/TDO	O	RD_DATA/TDO is a dual-function pin. If used for readback, RD_DATA provides configuration data out. If used in boundary scan, TDO is test data out.
Special-Purpose Pins (Become User I/O After Configuration)		
RDY/RCLK	O	During configuration in peripheral mode, RDY indicates another byte can be written to the FPGA. If a read operation is done when the device is selected, the same status is also available on D7 in asynchronous peripheral mode. After configuration, the pin is a user-programmable I/O*. During the master parallel configuration mode RCLK, which is a read output signal to an external memory. This output is not normally used. After configuration, this pin is a user-programmable I/O pin*.
DIN	I	During slave serial or master serial configuration modes, DIN accepts serial configuration data synchronous with CCLK. During parallel configuration modes, DIN is the D0 input. During configuration, a pull-up is enabled, and after configuration, this pin is a user-programmable I/O pin*.

* The FPGA States of Operation section contains more information on how to control these signals during start-up. The timing of DONE release is controlled by one set of bit stream options, and the timing of the simultaneous release of all other configuration pins (and the activation of all user I/Os) is controlled by a second set of options.

Pin Information (continued)

Table 17. Pin Descriptions (continued)

Symbol	I/O	Description
Special-Purpose Pins Special-Purpose Pins (Become User I/O After Configuration) (continued)		
M0, M1, M2	I	During powerup and initialization, M0—M2 are used to select the configuration mode with their values latched on the rising edge of $\overline{\text{INIT}}$. See Table 7 for the configuration modes. During configuration, a pull-up is enabled, and after configuration, the pins are user-programmable I/O*.
M3	I	During powerup and initialization, M3 is used to select the speed of the internal oscillator during configuration, with its value latched on the rising edge of $\overline{\text{INIT}}$. When M3 is low, the oscillator frequency is 10 MHz. When M3 is high, the oscillator is 1.25 MHz. During configuration, a pull-up is enabled, and after configuration, this pin is a user-programmable I/O pin*.
TDI, TCK, TMS	I	If boundary scan is used, these pins are Test Data In, Test Clock, and Test Mode Select inputs. If boundary scan is not selected, all boundary-scan functions are inhibited once configuration is complete, and these pins are user-programmable I/O pins. Even if boundary scan is not used, either TCK or TMS must be held at logic 1 during configuration. Each pin has a pull-up enabled during configuration*.
HDC	O	High During Configuration is output high until configuration is complete. It is used as a control output indicating that configuration is not complete. After configuration, this pin is a user-programmable I/O pin*.
$\overline{\text{LDC}}$	O	$\overline{\text{Low During Configuration}}$ is output low until configuration is complete. It is used as a control output indicating that configuration is not complete. After configuration, this pin is a user-programmable I/O pin*.
$\overline{\text{INIT}}$	I/O	$\overline{\text{INIT}}$ is a bidirectional signal before and during configuration. During configuration, a pull-up is enabled, but an external pull-up resistor is recommended. As an active-low open-drain output, $\overline{\text{INIT}}$ is held low during power stabilization and internal clearing of memory. As an active-low input, $\overline{\text{INIT}}$ holds the FPGA in the wait-state before the start of configuration. After configuration, the pin is a user-programmable I/O pin*.
$\overline{\text{CS0}}$, CS1, $\overline{\text{WR}}$, $\overline{\text{RD}}$	I	$\overline{\text{CS0}}$, CS1, $\overline{\text{WR}}$, $\overline{\text{RD}}$ are used in the asynchronous peripheral configuration modes. The FPGA is selected when $\overline{\text{CS0}}$ is low and CS1 is high. When selected, a low on the write strobe, $\overline{\text{WR}}$, loads the data on D[7:0] inputs into an internal data buffer. $\overline{\text{WR}}$, $\overline{\text{CS0}}$, and CS1 are also used as chip selects in the slave parallel mode. A low on $\overline{\text{RD}}$ changes D7 into a status output. As a status indication, a high indicates ready and a low indicates busy. $\overline{\text{WR}}$ and $\overline{\text{RD}}$ should not be used simultaneously. If they are, the write strobe overrides. During configuration, a pull-up is enabled, and after configuration, the pins are user-programmable I/O pins*.
A[17:0]	O	During master parallel configuration mode, A[17:0] address the configuration EPROM. During configuration, a pull-up is enabled, and after configuration, the pins are user-programmable I/O pins*.
D[7:0]	I	During master parallel, peripheral, and slave parallel configuration modes, D[7:0] receive configuration data and each pin has a pull-up enabled. After configuration, the pins are user-programmable I/O pins*.
DOUT	O	During configuration, DOUT is the serial data output that can drive the DIN of daisy-chained slave LCA devices. Data out on DOUT changes on the falling edge of CCLK. After configuration, DOUT is a user-programmable I/O pin*.

* The FPGA States of Operation section contains more information on how to control these signals during start-up. The timing of DONE release is controlled by one set of bit stream options, and the timing of the simultaneous release of all other configuration pins (and the activation of all user I/Os) is controlled by a second set of options.

Pin Information (continued)

Package Compatibility

The package pinouts are consistent across *ORCA* Series FPGAs with the following exception: **some user I/O pins that do not have any special functions will be converted to VDD5 pins for the OR2TxxA series**. If the designer does not use these pins for the OR2CxxA and OR2TxxB series, then pinout compatibility will be maintained between the *ORCA* OR2CxxA, OR2TxxA, and OR2TxxB series of FPGAs. Note that they must be connected to a power supply for the OR2TxxA series.

Package pinouts being consistent across all *ORCA* Series FPGAs enables a designer to select a package based on I/O requirements and change the FPGA without laying out the printed-circuit board again. The change might be to a larger FPGA if additional functionality is needed, or it might be to a smaller FPGA to decrease unit cost.

Table 18A provides the number of user I/Os available for the *ORCA* OR2CxxA and OR2TxxB Series FPGAs for each available package, and Table 18B provides the number of user I/Os available in the *ORCA* OR2TxxA series. It should be noted that the number of user I/Os available for the OR2TxxA series is reduced from the equivalent OR2CxxA devices by the number of required VDD5 pins, as shown in Table 18B. The pins that are converted from user I/O to VDD5 are denoted as I/O-VDD5 in the pin information tables (Table 19 through 28). Each package has six dedicated configuration pins.

Table 19—Table 28. provide the package pin and pin function for the *ORCA* Series 2 FPGAs and packages. The bond pad name is identified in the PIC nomenclature used in the *ORCA* Foundry design editor.

When the number of FPGA bond pads exceeds the number of package pins, bond pads are unused. When the number of package pins exceeds the number of bond pads, package pins are left unconnected (no connects). When a package pin is to be left as a no connect for a specific die, it is indicated as a note in the device pad column for the FPGA. The tables provide no information on unused pads.

Table 18A. *ORCA* OR2CxxA and OR2TxxB Series FPGA I/Os Summary

Device	84-Pin PLCC	100-Pin TQFP	144-Pin TQFP	160-Pin QFP	208-Pin SQFP/ SQFP2	240-Pin SQFP/ SQFP2	256-Pin PBGA	304-Pin SQFP/ SQFP2	352-Pin PBGA	432-Pin EBGA
OR2C04A										
User I/Os	64	77	114	130	160	—	—	—	—	—
VDD/VSS	14	17	24	24	31	—	—	—	—	—
OR2C06A										
User I/Os	64	77	114	130	171	192	192	—	—	—
VDD/VSS	14	17	24	24	31	42	26	—	—	—
OR2C08A										
User I/Os	64	—	—	130	171	192	221	—	—	—
VDD/VSS	14	—	—	24	31	40	26	—	—	—
OR2C10A										
User I/Os	64	—	—	130	171	192	221	—	256	—
VDD/VSS	14	—	—	24	31	40	26	—	48	—
OR2C12A										
User I/Os	64	—	—	—	171	192	223	252	288	—
VDD/VSS	14	—	—	—	31	42	26	46	48	—
OR2C15A/OR2T15B										
User I/Os	64	—	—	—	171	192	223	252	298	320*
VDD/VSS	14	—	—	—	31	42	26	46	48	84
OR2C26A										
User I/Os	—	—	—	—	171	192	—	252	298	342
VDD/VSS	—	—	—	—	31	42	—	46	48	84
OR2C40A/OR2T40B										
User I/Os	—	—	—	—	171	192	—	252	—	342
VDD/VSS	—	—	—	—	31	42	—	46	—	84

* 432 EBGA not available for OR2T15B

Pin Information (continued)

Table 18B. *ORCA* OR2TxxA Series FPGA I/Os Summary

Device	84-Pin PLCC	100-Pin TQFP	144-Pin TQFP	160-Pin QFP	208-Pin SQFP/ SQFP2	240-Pin SQFP/ SQFP2	256-Pin PBGA	352-Pin PBGA	432-Pin EBGA
OR2T04A									
User I/Os	62	74	110	126	152	—	—	—	—
VDD/VSS	14	17	24	24	31	—	—	—	—
VDD5	2	3	4	4	8	—	—	—	—
OR2T06A									
User I/Os	62	74	110	126	163	184	182	—	—
VDD/VSS	14	17	24	24	31	42	26	—	—
VDD5	2	3	4	4	8	8	10	—	—
OR2T08A									
User I/Os	62	—	—	126	163	184	209	—	—
VDD/VSS	14	—	—	24	31	40	26	—	—
VDD5	2	—	—	4	8	8	12	—	—
OR2T10A									
User I/Os	62	—	—	126	163	184	209	244	—
VDD/VSS	14	—	—	24	31	40	26	48	—
VDD5	2	—	—	4	8	8	12	12	—
OR2T12A									
User I/Os	62	—	—	—	163	184	211	276	—
VDD/VSS	14	—	—	—	31	42	26	48	—
VDD5	2	—	—	—	8	8	12	12	—
OR2T15A									
User I/Os	62	—	—	—	163	184	211	286	307
VDD/VSS	14	—	—	—	31	42	26	48	84
VDD5	2	—	—	—	8	8	12	12	12
OR2T26A									
User I/Os	—	—	—	—	163	184	—	286	326
VDD/VSS	—	—	—	—	31	42	—	48	84
VDD5	—	—	—	—	8	8	—	12	16
OR2T40A									
User I/Os	—	—	—	—	163	184	—	286	326
VDD/VSS	—	—	—	—	31	42	—	48	84
VDD5	—	—	—	—	8	8	—	12	16

EEPW .com.cn

Pin Information (continued)

Compatibility with Series 3 FPGAs

Pinouts for the OR2CxxA, OR2TxxA, and OR2TxxB devices will be consistent with the Series 3 FPGAs for all devices offered in the same packages. This includes the following pins: V_{DD}, V_{SS}, $V_{DD}5$ (OR3C/Txxx series only), and all configuration pins. Identical to the OR2TxxB devices, Series 3 devices provide 5 V tolerant I/Os without a dedicated $V_{DD}5$ supply

The following restrictions apply:

1. There are two configuration modes supported in the OR2C/TxxA series that are **not** supported in the Series 3 FPGAs series: master parallel down and synchronous peripheral modes. The Series 3 FPGAs have two new microprocessor interface (MPI) configuration modes that are unavailable in the Series 2.
2. There are 4 pins—one per each device side—that are user I/O in the OR2C/TxxA series which can only be used as fast dedicated clocks or global inputs in the Series 3 series. These pins are also used to drive the Express-CLK to the I/O FFs on their given side of the device. These four middle ExpressCLK pins should not be used to connect to a programmable clock manager (PCM). A corner ExpressCLK input should be used instead (see note below). See Table 18C for a list of these pins in each package.
3. There are two other pins that are user I/O in both the Series 2 and Series 3 series but also have optional added functionality in the Series 3 series. Each of these pins drives the ExpressCLKs on two sides of the device. They also have fast connectivity to the programmable clock manager (PCM). See Table 18C for a preliminary list of these pins in each package.

Table 18C. Series 3 ExpressCLK Pins

Pin Name/ Package	208-Pin SQFP2	240-Pin SQFP2	256-Pin PBGA	352-Pin PBGA	432-Pin EBGA	600-Pin EBGA
ECKL	22	26	K3	N2	R29	U33
ECKB	80	91	W11	AE14	AH16	AM18
ECKR	131	152	K18	N23	T2	V2
ECKT	178	207	B11	B14	C15	C17
I/O—SECKLL	49	56	W1	AB4	AG29	AK34
I/O—SECKUR	159	184	A19	A25	D5	D5

Note: The ECKR, ECKL, ECKT, and ECKB pins drive the ExpressCLK on their given edge of the device, while I/O—SECKLL and I/O—SECKUR drive an ExpressCLK on two edges of the device and provide connectivity to the programmable clock manager.

Pin Information (continued)

Table 19. OR2C/2T04A, OR2C/2T06A, OR2C/2T08A, OR2C/2T10A, OR2C/2T12A, and OR2C/2T15A 84-Pin PLCC Pinout

Pin	2C/2T04A Pad	2C/2T06A Pad	2C/2T08A Pad	2C/2T10A Pad	2C/2T12A Pad	2C/2T15A Pad	Function
1	VSS	VSS	VSS	VSS	VSS	VSS	VSS
2	PT5A	PT6A	PT7A	PT8A	PT9A	PT10A	I/O-D2
3	VSS	VSS	VSS	VSS	VSS	VSS	VSS
4	PT4D	PT5D	PT6D	PT7D	PT8D	PT9D	I/O-D1
5	PT4A	PT5A	PT6A	PT7A	PT8A	PT9A	I/O-D0/DIN
6	PT3A	PT4A	PT5A	PT6A	PT7A	PT8A	I/O-DOUT
7	PT2D	PT3D	PT4D	PT5D	PT6D	PT7D	I/O-VDD5
8	PT2A	PT3A	PT4A	PT4A	PT5A	PT6A	I/O-TDI
9	PT1D	PT2A	PT3A	PT3A	PT3A	PT4A	I/O-TMS
10	PT1A	PT1A	PT1A	PT1A	PT1A	PT1A	I/O-TCK
11	RD_DATA/TDO	RD_DATA/TDO	RD_DATA/TDO	RD_DATA/TDO	RD_DATA/TDO	RD_DATA/TDO	RD_DATA/TDO
12	VDD	VDD	VDD	VDD	VDD	VDD	VDD
13	VSS	VSS	VSS	VSS	VSS	VSS	VSS
14	PL1C	PL1A	PL2D	PL2D	PL2D	PL2D	I/O-A0
15	PL1A	PL2A	PL3A	PL3A	PL4A	PL5A	I/O-A1
16	PL2D	PL3D	PL4D	PL4A	PL5A	PL6A	I/O-A2
17	PL2A	PL3A	PL4A	PL5A	PL6A	PL7A	I/O-A3
18	PL3A	PL4A	PL5A	PL6A	PL7A	PL8A	I/O-A4
19	PL4D	PL5D	PL6D	PL7D	PL8D	PL9D	I/O-A5
20	PL4A	PL5A	PL6A	PL7A	PL8A	PL9A	I/O-A6
21	PL5A	PL6A	PL7A	PL8A	PL9A	PL10A	I/O-A7
22	VDD	VDD	VDD	VDD	VDD	VDD	VDD
23	PL6A	PL7A	PL8A	PL9A	PL10A	PL11A	I/O-A8
24	VSS	VSS	VSS	VSS	VSS	VSS	VSS
25	PL7D	PL8D	PL9D	PL10D	PL11D	PL12D	I/O-A9
26	PL7A	PL8A	PL9A	PL10A	PL11A	PL12A	I/O-A10
27	PL8A	PL9A	PL10A	PL11A	PL12A	PL13A	I/O-A11
28	PL9D	PL10D	PL11D	PL12D	PL13D	PL14D	I/O-A12
29	PL9A	PL10A	PL11A	PL13D	PL14B	PL15B	I/O-A13
30	PL10D	PL11A	PL12A	PL14C	PL16D	PL17D	I/O-A14
31	PL10A	PL12A	PL14A	PL16A	PL18A	PL20A	I/O-A15
32	CCLK	CCLK	CCLK	CCLK	CCLK	CCLK	CCLK
33	VDD	VDD	VDD	VDD	VDD	VDD	VDD
34	VSS	VSS	VSS	VSS	VSS	VSS	VSS
35	PB1A	PB1A	PB1A	PB1A	PB1A	PB1A	I/O-A16
36	PB1D	PB2A	PB3A	PB3B	PB3D	PB4D	I/O-A17
37	PB2A	PB3A	PB3D	PB4D	PB5B	PB6B	I/O
38	PB2D	PB3D	PB4D	PB5D	PB6D	PB7D	I/O
39	PB3A	PB4A	PB5A	PB6A	PB7A	PB8A	I/O
40	PB4A	PB5A	PB6A	PB7A	PB8A	PB9A	I/O
41	PB4D	PB5D	PB6D	PB7D	PB8D	PB9D	I/O
42	PB5A	PB6A	PB7A	PB8A	PB9A	PB10A	I/O

Note: The pins labeled I/O-VDD5 are user I/Os for the OR2CxxA and OR2TxxB series, but they are connected to VDD5 for the OR2TxxA series.

Pin Information (continued)

Table 19. OR2C/2T04A, OR2C/2T06A, OR2C/2T08A, OR2C/2T10A, OR2C/2T12A, and OR2C/2T15A 84-Pin PLCC Pinout (continued)

Pin	2C/2T04A Pad	2C/2T06A Pad	2C/2T08A Pad	2C/2T10A Pad	2C/2T12A Pad	2C/2T15A Pad	Function
43	VSS	VSS	VSS	VSS	VSS	VSS	VSS
44	PB6A	PB7A	PB8A	PB9A	PB10A	PB11A	I/O
45	VSS	VSS	VSS	VSS	VSS	VSS	VSS
46	PB7A	PB8A	PB9A	PB10A	PB11A	PB12A	I/O-VDD5
47	PB7D	PB8D	PB9D	PB10D	PB11D	PB12D	I/O
48	PB8A	PB9A	PB10A	PB11A	PB12A	PB13A	I/O-HDC
49	PB9A	PB10A	PB11A	PB12A	PB13A	PB14A	I/O-$\overline{\text{LDC}}$
50	PB9D	PB10D	PB11D	PB13A	PB13D	PB14D	I/O
51	PB10A	PB11A	PB12C	PB13D	PB15A	PB16A	I/O-$\overline{\text{INIT}}$
52	PB10D	PB12A	PB13D	PB15D	PB18D	PB20D	I/O
53	DONE	DONE	DONE	DONE	DONE	DONE	DONE
54	$\overline{\text{RESET}}$	$\overline{\text{RESET}}$	$\overline{\text{RESET}}$	$\overline{\text{RESET}}$	$\overline{\text{RESET}}$	$\overline{\text{RESET}}$	$\overline{\text{RESET}}$
55	$\overline{\text{PRGM}}$	$\overline{\text{PRGM}}$	$\overline{\text{PRGM}}$	$\overline{\text{PRGM}}$	$\overline{\text{PRGM}}$	$\overline{\text{PRGM}}$	$\overline{\text{PRGM}}$
56	PR10A	PR12A	PR14A	PR16A	PR18A	PR20A	I/O-M0
57	PR10D	PR11A	PR12A	PR14A	PR16A	PR17A	I/O
58	PR9A	PR10A	PR11A	PR13B	PR15D	PR16D	I/O-M1
59	PR9D	PR10D	PR11D	PR12B	PR13A	PR14A	I/O
60	PR8A	PR9A	PR10A	PR11A	PR12A	PR13A	I/O-M2
61	PR7A	PR8A	PR9A	PR10A	PR11A	PR12A	I/O-M3
62	PR7D	PR8D	PR9D	PR10D	PR11D	PR12D	I/O
63	PR6A	PR7A	PR8D	PR9D	PR10A	PR11A	I/O
64	VDD	VDD	VDD	VDD	VDD	VDD	VDD
65	PR5A	PR6A	PR7A	PR8A	PR9A	PR10A	I/O
66	VSS	VSS	VSS	VSS	VSS	VSS	VSS
67	PR4A	PR5A	PR6A	PR7A	PR8A	PR9A	I/O
68	PR4D	PR5D	PR6D	PR7D	PR8D	PR9D	I/O
69	PR3A	PR4A	PR5A	PR6A	PR7A	PR8A	I/O-CS1
70	PR2A	PR3A	PR4A	PR5A	PR6A	PR7A	I/O-$\overline{\text{CS0}}$
71	PR2D	PR3D	PR4D	PR4D	PR5D	PR6D	I/O
72	PR1A	PR2A	PR3A	PR3A	PR4A	PR5A	I/O-$\overline{\text{RD}}$
73	PR1D	PR1A	PR2A	PR2A	PR2A	PR3A	I/O-$\overline{\text{WR}}$
74	$\overline{\text{RD\_CFG}}$	$\overline{\text{RD\_CFG}}$	$\overline{\text{RD\_CFG}}$	$\overline{\text{RD\_CFG}}$	$\overline{\text{RD\_CFG}}$	$\overline{\text{RD\_CFG}}$	$\overline{\text{RD\_CFG}}$
75	VDD	VDD	VDD	VDD	VDD	VDD	VDD
76	VSS	VSS	VSS	VSS	VSS	VSS	VSS
77	PT10C	PT12A	PT13D	PT15D	PT17D	PT19A	I/O-RDY/RCLK
78	PT9D	PT11A	PT12C	PT13D	PT15D	PT16D	I/O-D7
79	PT9C	PT10D	PT11D	PT13A	PT14D	PT15D	I/O
80	PT9A	PT10A	PT11B	PT12B	PT13B	PT14B	I/O-D6
81	PT8A	PT9A	PT10A	PT11A	PT12A	PT13A	I/O-D5
82	PT7D	PT8D	PT9D	PT10D	PT11D	PT12D	I/O
83	PT7A	PT8A	PT9A	PT10A	PT11A	PT12A	I/O-D4
84	PT6A	PT7A	PT8A	PT9A	PT10A	PT11A	I/O-D3

Note: The pins labeled I/O-VDD5 are user I/Os for the OR2CxxA and OR2TxxB series, but they are connected to VDD5 for the OR2TxxA series.

Pin Information (continued)

Table 20. OR2C/2T04A and OR2C/2T06A 100-Pin TQFP Pinout

Pin	2C/2T04A Pad	2C/2T06A Pad	Function	Pin	2C/2T04A Pad	2C/2T06A Pad	Function
1	VDD	VDD	VDD	43	PB8C	PB9C	I/O
2	VSS	VSS	VSS	44	PB8D	PB9D	I/O
3	PL1C	PL1A	I/O-A0	45	PB9A	PB10A	I/O-$\overline{\text{LDC}}$
4	PL1A	PL2A	I/O-A1	46	PB9D	PB10D	I/O
5	PL2D	PL3D	I/O-A2	47	PB10A	PB11A	I/O-$\overline{\text{INIT}}$
6	PL2A	PL3A	I/O-A3	48	PB10D	PB12A	I/O
7	PL3D	PL4D	I/O	49	DONE	DONE	DONE
8	PL3A	PL4A	I/O-A4	50	VDD	VDD	VDD
9	PL4D	PL5D	I/O-A5	51	$\overline{\text{RESET}}$	$\overline{\text{RESET}}$	$\overline{\text{RESET}}$
10	PL4A	PL5A	I/O-A6	52	$\overline{\text{PRGM}}$	$\overline{\text{PRGM}}$	$\overline{\text{PRGM}}$
11	PL5D	PL6D	I/O	53	PR10A	PR12A	I/O-M0
12	PL5A	PL6A	I/O-A7	54	PR10D	PR11A	I/O
13	VDD	VDD	VDD	55	PR9A	PR10A	I/O-M1
14	PL6A	PL7A	I/O-A8	56	PR9D	PR10D	I/O
15	VSS	VSS	VSS	57	PR8A	PR9A	I/O-M2
16	PL7D	PL8D	I/O-A9	58	PR8D	PR9D	I/O
17	PL7A	PL8A	I/O-A10	59	PR7A	PR8A	I/O-M3
18	PL8A	PL9A	I/O-A11	60	PR7D	PR8D	I/O
19	PL9D	PL10D	I/O-A12	61	VSS	VSS	VSS
20	PL9C	PL10C	I/O	62	PR6A	PR7A	I/O
21	PL9A	PL10A	I/O-A13	63	VDD	VDD	VDD
22	PL10D	PL11A	I/O-A14	64	PR5A	PR6A	I/O
23	PL10A	PL12A	I/O-A15	65	VSS	VSS	VSS
24	VSS	VSS	VSS	66	PR4A	PR5A	I/O-VDD5
25	CCLK	CCLK	CCLK	67	PR4D	PR5D	I/O
26	VDD	VDD	VDD	68	PR3A	PR4A	I/O-CS1
27	VSS	VSS	VSS	69	PR3D	PR4D	I/O
28	PB1A	PB1A	I/O-A16	70	PR2A	PR3A	I/O-$\overline{\text{CS0}}$
29	PB1C	PB1D	I/O	71	PR2D	PR3D	I/O
30	PB1D	PB2A	I/O-A17	72	PR1A	PR2A	I/O-$\overline{\text{RD}}$
31	PB2A	PB3A	I/O	73	PR1C	PR2D	I/O
32	PB2D	PB3D	I/O	74	PR1D	PR1A	I/O-$\overline{\text{WR}}$
33	PB3A	PB4A	I/O	75	$\overline{\text{RD\_CFG}}$	$\overline{\text{RD\_CFG}}$	$\overline{\text{RD\_CFG}}$
34	PB4A	PB5A	I/O	76	VDD	VDD	VDD
35	PB4D	PB5D	I/O	77	VSS	VSS	VSS
36	PB5A	PB6A	I/O	78	PT10C	PT12A	I/O-RDY/RCLK
37	VSS	VSS	VSS	79	PT9D	PT11A	I/O-D7
38	PB6A	PB7A	I/O	80	PT9C	PT10D	I/O
39	VSS	VSS	VSS	81	PT9A	PT10A	I/O-D6
40	PB7A	PB8A	I/O-VDD5	82	PT8D	PT9D	I/O
41	PB7D	PB8D	I/O	83	PT8A	PT9A	I/O-D5
42	PB8A	PB9A	I/O-HDC	84	PT7D	PT8D	I/O

Note: The pins labeled I/O-VDD5 are user I/Os for the OR2CxxA and OR2TxxB series, but they are connected to VDD5 for the OR2TxxA series.

Pin Information (continued)

Table 20. OR2C/2T04A and OR2C/2T06A 100-Pin TQFP Pinout (continued)

Pin	2C/2T04A Pad	2C/2T06A Pad	Function	Pin	2C/2T04A Pad	2C/2T06A Pad	Function
85	PT7A	PT8A	I/O-D4	93	PT3D	PT4D	I/O
86	PT6D	PT7D	I/O	94	PT3A	PT4A	I/O-DOUT
87	PT6A	PT7A	I/O-D3	95	PT2D	PT3D	I/O-$V_{DD}5$
88	V_{SS}	V_{SS}	V_{SS}	96	PT2A	PT3A	I/O-TDI
89	PT5A	PT6A	I/O-D2	97	PT1D	PT2A	I/O-TMS
90	V_{SS}	V_{SS}	V_{SS}	98	PT1C	PT1D	I/O
91	PT4D	PT5D	I/O-D1	99	PT1A	PT1A	I/O-TCK
92	PT4A	PT5A	I/O-D0/DIN	100	RD_DATA/ TDO	RD_DATA/TDO	RD_DATA/TDO

Note: The pins labeled I/O-$V_{DD}5$ are user I/Os for the OR2CxxA and OR2TxxB series, but they are connected to $V_{DD}5$ for the OR2TxxA series.

EEPW 電子產品世界 .com.cn

Pin Information (continued)

Table 21. OR2C/2T04A and OR2C/2T06A 144-Pin TQFP Pinout

Pin	2C/2T04A Pad	2C/2T06A Pad	Function	Pin	2C/2T04A Pad	2C/2T06A Pad	Function
1	V_{DD}	V_{DD}	V_{DD}	43	PB2B	PB3B	I/O
2	V_{SS}	V_{SS}	V_{SS}	44	PB2D	PB3D	I/O
3	PL1C	PL1A	I/O-A0	45	V_{DD}	V_{DD}	V_{DD}
4	PL1B	PL2D	I/O	46	PB3A	PB4A	I/O
5	PL1A	PL2A	I/O-A1	47	PB3D	PB4D	I/O
6	PL2D	PL3D	I/O-A2	48	PB4A	PB5A	I/O
7	PL2A	PL3A	I/O-A3	49	PB4C	PB5C	I/O
8	PL3D	PL4D	I/O	50	PB4D	PB5D	I/O
9	PL3C	PL4C	I/O	51	PB5A	PB6A	I/O
10	PL3A	PL4A	I/O-A4	52	PB5C	PB6C	I/O
11	PL4D	PL5D	I/O-A5	53	PB5D	PB6D	I/O
12	PL4C	PL5C	I/O	54	V_{SS}	V_{SS}	V_{SS}
13	PL4A	PL5A	I/O-A6	55	PB6A	PB7A	I/O
14	V_{SS}	V_{SS}	V_{SS}	56	PB6C	PB7C	I/O
15	PL5D	PL6D	I/O	57	PB6D	PB7D	I/O
16	PL5C	PL6C	I/O	58	PB7A	PB8A	I/O-V_{DD}5
17	PL5A	PL6A	I/O-A7	59	PB7D	PB8D	I/O
18	V_{DD}	V_{DD}	V_{DD}	60	PB8A	PB9A	I/O-HDC
19	PL6D	PL7D	I/O	61	PB8C	PB9C	I/O
20	PL6C	PL7C	I/O-V_{DD}5	62	PB8D	PB9D	I/O
21	PL6A	PL7A	I/O-A8	63	V_{DD}	V_{DD}	V_{DD}
22	V_{SS}	V_{SS}	V_{SS}	64	PB9A	PB10A	I/O-$\overline{LDC}$
23	PL7D	PL8D	I/O-A9	65	PB9C	PB10C	I/O
24	PL7A	PL8A	I/O-A10	66	PB9D	PB10D	I/O
25	PL8D	PL9D	I/O	67	PB10A	PB11A	I/O-$\overline{INIT}$
26	PL8C	PL9C	I/O	68	PB10C	PB11D	I/O
27	PL8A	PL9A	I/O-A11	69	PB10D	PB12A	I/O
28	PL9D	PL10D	I/O-A12	70	V_{SS}	V_{SS}	V_{SS}
29	PL9C	PL10C	I/O	71	DONE	DONE	DONE
30	PL9A	PL10A	I/O-A13	72	V_{DD}	V_{DD}	V_{DD}
31	PL10D	PL11A	I/O-A14	73	V_{SS}	V_{SS}	V_{SS}
32	PL10C	PL12D	I/O	74	$\overline{RESET}$	$\overline{RESET}$	$\overline{RESET}$
33	PL10B	PL12B	I/O	75	$\overline{PRGM}$	$\overline{PRGM}$	$\overline{PRGM}$
34	PL10A	PL12A	I/O-A15	76	PR10A	PR12A	I/O-M0
35	V_{SS}	V_{SS}	V_{SS}	77	PR10B	PR12D	I/O
36	CCLK	CCLK	CCLK	78	PR10D	PR11A	I/O
37	V_{DD}	V_{DD}	V_{DD}	79	PR9A	PR10A	I/O-M1
38	V_{SS}	V_{SS}	V_{SS}	80	PR9C	PR10C	I/O
39	PB1A	PB1A	I/O-A16	81	PR9D	PR10D	I/O
40	PB1C	PB1D	I/O	82	PR8A	PR9A	I/O-M2
41	PB1D	PB2A	I/O-A17	83	PR8B	PR9B	I/O
42	PB2A	PB3A	I/O	84	PR8D	PR9D	I/O

Note: The pins labeled I/O-V_{DD}5 are user I/Os for the OR2CxxA and OR2TxxB series, but they are connected to V_{DD}5 for the OR2TxxA series.

Pin Information (continued)

Table 21. OR2C/2T04A and OR2C/2T06A 144-Pin TQFP Pinout (continued)

Pin	2C/2T04A Pad	2C/2T06A Pad	Function	Pin	2C/2T04A Pad	2C/2T06A Pad	Function
85	PR7A	PR8A	I/O-M3	115	PT9C	PT10D	I/O
86	PR7D	PR8D	I/O	116	PT9B	PT10C	I/O
87	VSS	VSS	VSS	117	PT9A	PT10A	I/O-D6
88	PR6A	PR7A	I/O	118	VDD	VDD	VDD
89	PR6C	PR7C	I/O	119	PT8D	PT9D	I/O
90	PR6D	PR7D	I/O	120	PT8A	PT9A	I/O-D5
91	VDD	VDD	VDD	121	PT7D	PT8D	I/O
92	PR5A	PR6A	I/O	122	PT7B	PT8B	I/O
93	PR5C	PR6C	I/O	123	PT7A	PT8A	I/O-D4
94	PR5D	PR6D	I/O	124	PT6D	PT7D	I/O
95	VSS	VSS	VSS	125	PT6C	PT7C	I/O
96	PR4A	PR5A	I/O-VDD5	126	PT6A	PT7A	I/O-D3
97	PR4C	PR5C	I/O	127	VSS	VSS	VSS
98	PR4D	PR5D	I/O	128	PT5D	PT6D	I/O
99	PR3A	PR4A	I/O-CS1	129	PT5C	PT6C	I/O
100	PR3D	PR4D	I/O	130	PT5A	PT6A	I/O-D2
101	PR2A	PR3A	I/O-$\overline{CS0}$	131	PT4D	PT5D	I/O-D1
102	PR2D	PR3D	I/O	132	PT4C	PT5C	I/O
103	PR1A	PR2A	I/O-$\overline{RD}$	133	PT4A	PT5A	I/O-D0/DIN
104	PR1B	PR2C	I/O	134	PT3D	PT4D	I/O
105	PR1C	PR2D	I/O	135	PT3A	PT4A	I/O-DOUT
106	PR1D	PR1A	I/O-$\overline{WR}$	136	VDD	VDD	VDD
107	VSS	VSS	VSS	137	PT2D	PT3D	I/O-VDD5
108	$\overline{RD\_CFG}$	$\overline{RD\_CFG}$	$\overline{RD\_CFG}$	138	PT2C	PT3C	I/O
109	VDD	VDD	VDD	139	PT2A	PT3A	I/O-TDI
110	VSS	VSS	VSS	140	PT1D	PT2A	I/O-TMS
111	PT10D	PT12D	I/O	141	PT1C	PT1D	I/O
112	PT10C	PT12A	I/O-RDY/RCLK	142	PT1A	PT1A	I/O-TCK
113	PT10B	PT11D	I/O	143	VSS	VSS	VSS
114	PT9D	PT11A	I/O-D7	144	RD_DATA/ TDO	RD_DATA/ TDO	RD_DATA/TDO

Note: The pins labeled I/O-VDD5 are user I/Os for the OR2CxxA and OR2TxxB series, but they are connected to VDD5 for the OR2TxxA series.

Pin Information (continued)

Table 22. OR2C/2T04A, OR2C/2T06A, OR2C/2T08A, and OR2C/2T10A 160-Pin QFP Pinout

Pin	2C/2T04A Pad	2C/2T06A Pad	2C/2T08A Pad	2C/2T10A Pad	Function
1	VDD	VDD	VDD	VDD	VDD
2	VSS	VSS	VSS	VSS	VSS
3	PL1D	PL1D	PL1D	PL1D	I/O
4	PL1C	PL1A	PL2D	PL2D	I/O-A0
5	PL1B	PL2D	PL3D	PL3D	I/O
6	PL1A	PL2A	PL3A	PL3A	I/O-A1
7	PL2D	PL3D	PL4D	PL4A	I/O-A2
8	PL2C	PL3C	PL4C	PL5C	I/O
9	PL2A	PL3A	PL4A	PL5A	I/O-A3
10	PL3D	PL4D	PL5D	PL6D	I/O
11	PL3C	PL4C	PL5C	PL6C	I/O
12	PL3A	PL4A	PL5A	PL6A	I/O-A4
13	PL4D	PL5D	PL6D	PL7D	I/O-A5
14	PL4C	PL5C	PL6C	PL7C	I/O
15	PL4A	PL5A	PL6A	PL7A	I/O-A6
16	VSS	VSS	VSS	VSS	VSS
17	PL5D	PL6D	PL7D	PL8D	I/O
18	PL5C	PL6C	PL7C	PL8C	I/O
19	PL5A	PL6A	PL7A	PL8A	I/O-A7
20	VDD	VDD	VDD	VDD	VDD
21	PL6D	PL7D	PL8D	PL9D	I/O
22	PL6C	PL7C	PL8C	PL9C	I/O-VDD5
23	PL6A	PL7A	PL8A	PL9A	I/O-A8
24	VSS	VSS	VSS	VSS	VSS
25	PL7D	PL8D	PL9D	PL10D	I/O-A9
26	PL7B	PL8B	PL9B	PL10B	I/O
27	PL7A	PL8A	PL9A	PL10A	I/O-A10
28	PL8D	PL9D	PL10D	PL11D	I/O
29	PL8C	PL9C	PL10C	PL11C	I/O
30	PL8A	PL9A	PL10A	PL11A	I/O-A11
31	PL9D	PL10D	PL11D	PL12D	I/O-A12
32	PL9C	PL10C	PL11C	PL12C	I/O
33	PL9B	PL10B	PL11B	PL12B	I/O
34	PL9A	PL10A	PL11A	PL13D	I/O-A13
35	PL10D	PL11A	PL12A	PL14C	I/O-A14
36	PL10C	PL12D	PL13D	PL15D	I/O
37	PL10B	PL12B	PL14D	PL16D	I/O
38	PL10A	PL12A	PL14A	PL16A	I/O-A15
39	CCLK	CCLK	CCLK	CCLK	CCLK
40	VSS	VSS	VSS	VSS	VSS

Note: The pins labeled I/O-VDD5 are user I/Os for the OR2CxxA and OR2TxxB series, but they are connected to VDD5 for the OR2TxxA series.

Pin Information (continued)

Table 22. OR2C/2T04A, OR2C/2T06A, OR2C/2T08A, and OR2C/2T10A 160-Pin QFP Pinout (continued)

Pin	2C/2T04A Pad	2C/2T06A Pad	2C/2T08A Pad	2C/2T10A Pad	Function
41	VDD	VDD	VDD	VDD	VDD
42	VSS	VSS	VSS	VSS	VSS
43	PB1A	PB1A	PB1A	PB1A	I/O-A16
44	PB1B	PB1C	PB2A	PB2A	I/O
45	PB1C	PB1D	PB2D	PB2D	I/O
46	PB1D	PB2A	PB3A	PB3B	I/O-A17
47	PB2A	PB3A	PB3D	PB4D	I/O
48	PB2B	PB3B	PB4A	PB5A	I/O
49	PB2C	PB3C	PB4C	PB5C	I/O
50	PB2D	PB3D	PB4D	PB5D	I/O
51	VDD	VDD	VDD	VDD	VDD
52	PB3A	PB4A	PB5A	PB6A	I/O
53	PB3D	PB4D	PB5D	PB6D	I/O
54	PB4A	PB5A	PB6A	PB7A	I/O
55	PB4C	PB5C	PB6C	PB7C	I/O
56	PB4D	PB5D	PB6D	PB7D	I/O
57	PB5A	PB6A	PB7A	PB8A	I/O
58	PB5C	PB6C	PB7C	PB8C	I/O
59	PB5D	PB6D	PB7D	PB8D	I/O
60	VSS	VSS	VSS	VSS	VSS
61	PB6A	PB7A	PB8A	PB9A	I/O
62	PB6C	PB7C	PB8C	PB9C	I/O
63	PB6D	PB7D	PB8D	PB9D	I/O
64	PB7A	PB8A	PB9A	PB10A	I/O-VDD5
65	PB7D	PB8D	PB9D	PB10D	I/O
66	PB8A	PB9A	PB10A	PB11A	I/O-HDC
67	PB8C	PB9C	PB10C	PB11C	I/O
68	PB8D	PB9D	PB10D	PB11D	I/O
69	VDD	VDD	VDD	VDD	VDD
70	PB9A	PB10A	PB11A	PB12A	I/O-$\overline{\text{LDC}}$
71	PB9B	PB10B	PB11D	PB13A	I/O
72	PB9C	PB10C	PB12A	PB13B	I/O
73	PB9D	PB10D	PB12B	PB13C	I/O
74	PB10A	PB11A	PB12C	PB13D	I/O-$\overline{\text{INIT}}$
75	PB10B	PB11C	PB12D	PB14A	I/O
76	PB10C	PB11D	PB13D	PB15D	I/O
77	PB10D	PB12A	PB14D	PB16D	I/O
78	VSS	VSS	VSS	VSS	VSS
79	DONE	DONE	DONE	DONE	DONE
80	VDD	VDD	VDD	VDD	VDD
81	VSS	VSS	VSS	VSS	VSS

Note: The pins labeled I/O-VDD5 are user I/Os for the OR2CxxA and OR2TxxB series, but they are connected to VDD5 for the OR2TxxA series.

Pin Information (continued)

Table 22. OR2C/2T04A, OR2C/2T06A, OR2C/2T08A, and OR2C/2T10A 160-Pin QFP Pinout (continued)

Pin	2C/2T04A Pad	2C/2T06A Pad	2C/2T08A Pad	2C/2T10A Pad	Function
82	$\overline{\text{RESET}}$	$\overline{\text{RESET}}$	$\overline{\text{RESET}}$	$\overline{\text{RESET}}$	$\overline{\text{RESET}}$
83	$\overline{\text{PRGM}}$	$\overline{\text{PRGM}}$	$\overline{\text{PRGM}}$	$\overline{\text{PRGM}}$	$\overline{\text{PRGM}}$
84	PR10A	PR12A	PR14A	PR16A	I/O-M0
85	PR10B	PR12D	PR13A	PR15A	I/O
86	PR10C	PR11A	PR13D	PR15D	I/O
87	PR10D	PR11B	PR12A	PR14A	I/O
88	PR9A	PR10A	PR11A	PR13B	I/O-M1
89	PR9B	PR10B	PR11B	PR13C	I/O
90	PR9C	PR10C	PR11C	PR12A	I/O
91	PR9D	PR10D	PR11D	PR12B	I/O
92	PR8A	PR9A	PR10A	PR11A	I/O-M2
93	PR8B	PR9B	PR10B	PR11B	I/O
94	PR8D	PR9D	PR10D	PR11D	I/O
95	PR7A	PR8A	PR9A	PR10A	I/O-M3
96	PR7D	PR8D	PR9D	PR10D	I/O
97	V_{SS}	V_{SS}	V_{SS}	V_{SS}	V_{SS}
98	PR6A	PR7A	PR8A	PR9A	I/O
99	PR6C	PR7C	PR8C	PR9C	I/O
100	PR6D	PR7D	PR8D	PR9D	I/O
101	V_{DD}	V_{DD}	V_{DD}	V_{DD}	V_{DD}
102	PR5A	PR6A	PR7A	PR8A	I/O
103	PR5C	PR6C	PR7C	PR8C	I/O
104	PR5D	PR6D	PR7D	PR8D	I/O
105	V_{SS}	V_{SS}	V_{SS}	V_{SS}	V_{SS}
106	PR4A	PR5A	PR6A	PR7A	I/O-V_{DD}5
107	PR4C	PR5C	PR6C	PR7C	I/O
108	PR4D	PR5D	PR6D	PR7D	I/O
109	PR3A	PR4A	PR5A	PR6A	I/O-CS1
110	PR3B	PR4B	PR5B	PR6B	I/O
111	PR3D	PR4D	PR5D	PR6D	I/O
112	PR2A	PR3A	PR4A	PR5A	I/O-$\overline{\text{CS0}}$
113	PR2C	PR3C	PR4B	PR4B	I/O
114	PR2D	PR3D	PR4D	PR4D	I/O
115	PR1A	PR2A	PR3A	PR3A	I/O-$\overline{\text{RD}}$
116	PR1B	PR2C	PR3C	PR3C	I/O
117	PR1C	PR2D	PR3D	PR3D	I/O
118	PR1D	PR1A	PR2A	PR2A	I/O-$\overline{\text{WR}}$
119	V_{SS}	V_{SS}	V_{SS}	V_{SS}	V_{SS}
120	$\overline{\text{RD\_CFG}}$	$\overline{\text{RD\_CFG}}$	$\overline{\text{RD\_CFG}}$	$\overline{\text{RD\_CFG}}$	$\overline{\text{RD\_CFG}}$
121	V_{DD}	V_{DD}	V_{DD}	V_{DD}	V_{DD}
122	V_{SS}	V_{SS}	V_{SS}	V_{SS}	V_{SS}

Note: The pins labeled I/O-V_{DD}5 are user I/Os for the OR2CxxA and OR2TxxB series, but they are connected to V_{DD}5 for the OR2TxxA series.

Pin Information (continued)

Table 22. OR2C/2T04A, OR2C/2T06A, OR2C/2T08A, and OR2C/2T10A 160-Pin QFP Pinout (continued)

Pin	2C/2T04A Pad	2C/2T06A Pad	2C/2T08A Pad	2C/2T10A Pad	Function
123	PT10D	PT12D	PT14D	PT16D	I/O
124	PT10C	PT12A	PT13D	PT15D	I/O-RDY/RCLK
125	PT10B	PT11D	PT13A	PT15A	I/O
126	PT10A	PT11C	PT12D	PT14D	I/O
127	PT9D	PT11A	PT12C	PT13D	I/O-D7
128	PT9C	PT10D	PT12A	PT13B	I/O
129	PT9B	PT10C	PT11D	PT13A	I/O
130	PT9A	PT10A	PT11B	PT12B	I/O-D6
131	VDD	VDD	VDD	VDD	VDD
132	PT8D	PT9D	PT10D	PT11D	I/O
133	PT8A	PT9A	PT10A	PT11A	I/O-D5
134	PT7D	PT8D	PT9D	PT10D	I/O
135	PT7B	PT8B	PT9B	PT10B	I/O
136	PT7A	PT8A	PT9A	PT10A	I/O-D4
137	PT6D	PT7D	PT8D	PT9D	I/O
138	PT6C	PT7C	PT8C	PT9C	I/O
139	PT6A	PT7A	PT8A	PT9A	I/O-D3
140	VSS	VSS	VSS	VSS	VSS
141	PT5D	PT6D	PT7D	PT8D	I/O
142	PT5C	PT6C	PT7C	PT8C	I/O
143	PT5A	PT6A	PT7A	PT8A	I/O-D2
144	PT4D	PT5D	PT6D	PT7D	I/O-D1
145	PT4C	PT5C	PT6C	PT7C	I/O
146	PT4A	PT5A	PT6A	PT7A	I/O-D0/DIN
147	PT3D	PT4D	PT5D	PT6D	I/O
148	PT3C	PT4C	PT5C	PT6C	I/O
149	PT3A	PT4A	PT5A	PT6A	I/O-DOUT
150	VDD	VDD	VDD	VDD	VDD
151	PT2D	PT3D	PT4D	PT5D	I/O-VDD5
152	PT2C	PT3C	PT4C	PT5A	I/O
153	PT2B	PT3B	PT4B	PT4D	I/O
154	PT2A	PT3A	PT4A	PT4A	I/O-TDI
155	PT1D	PT2A	PT3A	PT3A	I/O-TMS
156	PT1C	PT1D	PT2A	PT2A	I/O
157	PT1B	PT1C	PT1D	PT1D	I/O
158	PT1A	PT1A	PT1A	PT1A	I/O-TCK
159	VSS	VSS	VSS	VSS	VSS
160	RD_DATA/TDO	RD_DATA/TDO	RD_DATA/TDO	RD_DATA/TDO	RD_DATA/TDO

Note: The pins labeled I/O-VDD5 are user I/Os for the OR2CxxA and OR2TxxB series, but they are connected to VDD5 for the OR2TxxA series.

Pin Information (continued)

Table 23. OR2C/2T04A, OR2C/2T06A, OR2C/2T08A, OR2C/2T10A, OR2C/2T12A, OR2C/2T15A/B, OR2C/2T26A, and OR2C/2T40A/B 208-Pin SQFP/SQFP2 Pinout

Pin	2C/2T04A Pad	2C/2T06A Pad	2C/2T08A Pad	2C/2T10A Pad	2C/2T12A Pad	2C/2T15A/B Pad	2C/2T26A Pad	2C/2T40A/B Pad	Function
1	VSS	VSS	VSS	VSS	VSS	VSS	VSS	VSS	VSS
2	VSS	VSS	VSS	VSS	VSS	VSS	VSS	VSS	VSS
3	PL1D	PL1D	PL1D	PL1D	PL1D	PL1D	PL1D	PL1D	I/O
4	PL1C	PL1A	PL2D	PL2D	PL2D	PL2D	PL2D	PL3D	I/O-A0
5	PL1B	PL2D	PL3D	PL3D	PL3D	PL4D	PL4D	PL5D	I/O-VDD5
6	See Note	PL2C	PL3C	PL3C	PL3A	PL4A	PL4A	PL6D	I/O
7	PL1A	PL2A	PL3A	PL3A	PL4A	PL5A	PL5A	PL8D	I/O-A1
8	PL2D	PL3D	PL4D	PL4A	PL5A	PL6A	PL6A	PL9A	I/O-A2
9	PL2C	PL3C	PL4C	PL5C	PL6D	PL7D	PL7D	PL10D	I/O
10	PL2B	PL3B	PL4B	PL5B	PL6B	PL7B	PL7B	PL10B	I/O
11	PL2A	PL3A	PL4A	PL5A	PL6A	PL7A	PL7A	PL10A	I/O-A3
12	VDD	VDD	VDD	VDD	VDD	VDD	VDD	VDD	VDD
13	PL3D	PL4D	PL5D	PL6D	PL7D	PL8D	PL8D	PL11D	I/O
14	PL3C	PL4C	PL5C	PL6C	PL7C	PL8C	PL8A	PL11A	I/O
15	PL3B	PL4B	PL5B	PL6B	PL7B	PL8B	PL9D	PL12D	I/O
16	PL3A	PL4A	PL5A	PL6A	PL7A	PL8A	PL9A	PL12A	I/O-A4
17	PL4D	PL5D	PL6D	PL7D	PL8D	PL9D	PL10D	PL13D	I/O-A5
18	PL4C	PL5C	PL6C	PL7C	PL8C	PL9C	PL10A	PL13A	I/O
19	PL4B	PL5B	PL6B	PL7B	PL8B	PL9B	PL11D	PL14D	I/O
20	PL4A	PL5A	PL6A	PL7A	PL8A	PL9A	PL11A	PL14A	I/O-A6
21	VSS	VSS	VSS	VSS	VSS	VSS	VSS	VSS	VSS
22	PL5D	PL6D	PL7D	PL8D	PL9D	PL10D	PL12D	PL15D	I/O
23	PL5C	PL6C	PL7C	PL8C	PL9C	PL10C	PL12C	PL15C	I/O
24	PL5B	PL6B	PL7B	PL8B	PL9B	PL10B	PL12B	PL15B	I/O
25	PL5A	PL6A	PL7A	PL8A	PL9A	PL10A	PL12A	PL15A	I/O-A7
26	VDD	VDD	VDD	VDD	VDD	VDD	VDD	VDD	VDD
27	PL6D	PL7D	PL8D	PL9D	PL10D	PL11D	PL13D	PL16D	I/O
28	PL6C	PL7C	PL8C	PL9C	PL10C	PL11C	PL13C	PL16C	I/O-VDD5
29	PL6B	PL7B	PL8B	PL9B	PL10B	PL11B	PL13B	PL16B	I/O
30	PL6A	PL7A	PL8A	PL9A	PL10A	PL11A	PL13A	PL16A	I/O-A8
31	VSS	VSS	VSS	VSS	VSS	VSS	VSS	VSS	VSS
32	PL7D	PL8D	PL9D	PL10D	PL11D	PL12D	PL14D	PL17D	I/O-A9
33	PL7C	PL8C	PL9C	PL10C	PL11C	PL12C	PL14A	PL17A	I/O
34	PL7B	PL8B	PL9B	PL10B	PL11B	PL12B	PL15D	PL18D	I/O
35	PL7A	PL8A	PL9A	PL10A	PL11A	PL12A	PL15A	PL18A	I/O-A10
36	PL8D	PL9D	PL10D	PL11D	PL12D	PL13D	PL16D	PL19D	I/O
37	PL8C	PL9C	PL10C	PL11C	PL12C	PL13C	PL16A	PL19A	I/O
38	PL8B	PL9B	PL10B	PL11B	PL12B	PL13B	PL17D	PL20D	I/O
39	PL8A	PL9A	PL10A	PL11A	PL12A	PL13A	PL17A	PL20A	I/O-A11
40	VDD	VDD	VDD	VDD	VDD	VDD	VDD	VDD	VDD
41	PL9D	PL10D	PL11D	PL12D	PL13D	PL14D	PL18D	PL21D	I/O-A12
42	PL9C	PL10C	PL11C	PL12C	PL13B	PL14B	PL18B	PL21B	I/O
43	PL9B	PL10B	PL11B	PL12B	PL14D	PL15D	PL19D	PL22D	I/O

Notes:

The OR2C04A and OR2T04A do not have bond pads connected to 208-pin SQFP package pin numbers 6, 45, 47, 56, 60, 102, 153, 154, 166, 201, and 203.

The pins labeled I/O-VDD5 are user I/Os for the OR2CxxA and OR2TxxB series, but they are connected to VDD5 for the OR2TxxA series.

Pin Information (continued)

Table 23. OR2C/2T04A, OR2C/2T06A, OR2C/2T08A, OR2C/2T10A, OR2C/2T12A, OR2C/2T15A/B, OR2C/2T26A, and OR2C/2T40A/B 208-Pin SQFP/SQFP2 Pinout (continued)

Pin	2C/2T04A Pad	2C/2T06A Pad	2C/2T08A Pad	2C/2T10A Pad	2C/2T12A Pad	2C/2T15A/B Pad	2C/2T26A Pad	2C/2T40A/B Pad	Function
44	PL9A	PL10A	PL11A	PL13D	PL14B	PL15B	PL19B	PL22B	I/O-A13
45	See Note	PL11D	PL12D	PL13B	PL15D	PL16D	PL20D	PL23D	I/O
46	PL10D	PL11A	PL12A	PL14C	PL16D	PL17D	PL21D	PL25A	I/O-A14
47	See Note	PL12D	PL13D	PL15D	PL17D	PL18D	PL22D	PL27D	I/O
48	PL10C	PL12C	PL13A	PL15A	PL17A	PL19D	PL23D	PL28D	I/O
49	PL10B	PL12B	PL14D	PL16D	PL18C	PL19A	PL23A	PL28A	I/O
50	PL10A	PL12A	PL14A	PL16A	PL18A	PL20A	PL24A	PL30A	I/O-A15
51	VSS	VSS	VSS	VSS	VSS	VSS	VSS	VSS	VSS
52	CCLK	CCLK	CCLK	CCLK	CCLK	CCLK	CCLK	CCLK	CCLK
53	VSS	VSS	VSS	VSS	VSS	VSS	VSS	VSS	VSS
54	VSS	VSS	VSS	VSS	VSS	VSS	VSS	VSS	VSS
55	PB1A	PB1A	PB1A	PB1A	PB1A	PB1A	PB1A	PB1A	I/O-A16
56	See Note	PB1B	PB1D	PB1D	PB1D	PB2A	PB2A	PB3A	I/O
57	PB1B	PB1C	PB2A	PB2A	PB2A	PB2D	PB2D	PB3D	I/O-VDD5
58	PB1C	PB1D	PB2D	PB2D	PB2D	PB3D	PB3D	PB4D	I/O
59	PB1D	PB2A	PB3A	PB3B	PB3D	PB4D	PB4D	PB5D	I/O-A17
60	See Note	PB2D	PB3D	PB4D	PB4D	PB5D	PB5D	PB6D	I/O
61	PB2A	PB3A	PB4A	PB5A	PB5B	PB6B	PB6B	PB7D	I/O
62	PB2B	PB3B	PB4B	PB5B	PB5D	PB6D	PB6D	PB8D	I/O
63	PB2C	PB3C	PB4C	PB5C	PB6B	PB7B	PB7B	PB9D	I/O
64	PB2D	PB3D	PB4D	PB5D	PB6D	PB7D	PB7D	PB10D	I/O
65	VDD	VDD	VDD	VDD	VDD	VDD	VDD	VDD	VDD
66	PB3A	PB4A	PB5A	PB6A	PB7A	PB8A	PB8A	PB11A	I/O
67	PB3B	PB4B	PB5B	PB6B	PB7B	PB8B	PB8D	PB11D	I/O
68	PB3C	PB4C	PB5C	PB6C	PB7C	PB8C	PB9A	PB12A	I/O
69	PB3D	PB4D	PB5D	PB6D	PB7D	PB8D	PB9D	PB12D	I/O
70	PB4A	PB5A	PB6A	PB7A	PB8A	PB9A	PB10A	PB13A	I/O
71	PB4B	PB5B	PB6B	PB7B	PB8B	PB9B	PB10D	PB13D	I/O
72	PB4C	PB5C	PB6C	PB7C	PB8C	PB9C	PB11A	PB14A	I/O
73	PB4D	PB5D	PB6D	PB7D	PB8D	PB9D	PB11D	PB14D	I/O
74	VSS	VSS	VSS	VSS	VSS	VSS	VSS	VSS	VSS
75	PB5A	PB6A	PB7A	PB8A	PB9A	PB10A	PB12A	PB15A	I/O
76	PB5B	PB6B	PB7B	PB8B	PB9B	PB10B	PB12B	PB15B	I/O
77	PB5C	PB6C	PB7C	PB8C	PB9C	PB10C	PB12C	PB15C	I/O
78	PB5D	PB6D	PB7D	PB8D	PB9D	PB10D	PB12D	PB15D	I/O
79	VSS	VSS	VSS	VSS	VSS	VSS	VSS	VSS	VSS
80	PB6A	PB7A	PB8A	PB9A	PB10A	PB11A	PB13A	PB16A	I/O
81	PB6B	PB7B	PB8B	PB9B	PB10B	PB11B	PB13B	PB16B	I/O
82	PB6C	PB7C	PB8C	PB9C	PB10C	PB11C	PB13C	PB16C	I/O
83	PB6D	PB7D	PB8D	PB9D	PB10D	PB11D	PB13D	PB16D	I/O
84	VSS	VSS	VSS	VSS	VSS	VSS	VSS	VSS	VSS
85	PB7A	PB8A	PB9A	PB10A	PB11A	PB12A	PB14A	PB17A	I/O-VDD5
86	PB7B	PB8B	PB9B	PB10B	PB11B	PB12B	PB14D	PB17D	I/O

Notes:

The OR2C04A and OR2T04A do not have bond pads connected to 208-pin SQFP package pin numbers 6, 45, 47, 56, 60, 102, 153, 154, 166, 201, and 203.

The pins labeled I/O-VDD5 are user I/Os for the OR2CxxA and OR2TxxB series, but they are connected to VDD5 for the OR2TxxA series.

Pin Information (continued)

Table 23. OR2C/2T04A, OR2C/2T06A, OR2C/2T08A, OR2C/2T10A, OR2C/2T12A, OR2C/2T15A/B, OR2C/2T26A, and OR2C/2T40A/B 208-Pin SQFP/SQFP2 Pinout (continued)

Pin	2C/2T04A Pad	2C/2T06A Pad	2C/2T08A Pad	2C/2T10A Pad	2C/2T12A Pad	2C/2T15A/B Pad	2C/2T26A Pad	2C/2T40A/B Pad	Function
87	PB7C	PB8C	PB9C	PB10C	PB11C	PB12C	PB15A	PB18A	I/O
88	PB7D	PB8D	PB9D	PB10D	PB11D	PB12D	PB15D	PB18D	I/O
89	PB8A	PB9A	PB10A	PB11A	PB12A	PB13A	PB16A	PB19A	I/O-HDC
90	PB8B	PB9B	PB10B	PB11B	PB12B	PB13B	PB16D	PB19D	I/O
91	PB8C	PB9C	PB10C	PB11C	PB12C	PB13C	PB17A	PB20A	I/O
92	PB8D	PB9D	PB10D	PB11D	PB12D	PB13D	PB17D	PB20D	I/O
93	VDD	VDD	VDD	VDD	VDD	VDD	VDD	VDD	VDD
94	PB9A	PB10A	PB11A	PB12A	PB13A	PB14A	PB18A	PB21A	I/O-$\overline{\text{LDC}}$
95	PB9B	PB10B	PB11D	PB13A	PB13D	PB14D	PB18D	PB22D	I/O
96	PB9C	PB10C	PB12A	PB13B	PB14A	PB15A	PB19A	PB23A	I/O
97	PB9D	PB10D	PB12B	PB13C	PB14D	PB15D	PB19D	PB24D	I/O
98	PB10A	PB11A	PB12C	PB13D	PB15A	PB16A	PB20A	PB25A	I/O-$\overline{\text{INIT}}$
99	PB10B	PB11C	PB12D	PB14A	PB16A	PB17A	PB21A	PB26A	I/O
100	PB10C	PB11D	PB13A	PB15A	PB17A	PB18A	PB22A	PB27A	I/O
101	PB10D	PB12A	PB13D	PB15D	PB18A	PB19D	PB23D	PB28D	I/O
102	See Note	PB12D	PB14D	PB16D	PB18D	PB20D	PB24D	PB30D	I/O
103	VSS	VSS	VSS	VSS	VSS	VSS	VSS	VSS	VSS
104	DONE	DONE	DONE	DONE	DONE	DONE	DONE	DONE	DONE
105	VSS	VSS	VSS	VSS	VSS	VSS	VSS	VSS	VSS
106	$\overline{\text{RESET}}$	$\overline{\text{RESET}}$	$\overline{\text{RESET}}$	$\overline{\text{RESET}}$	$\overline{\text{RESET}}$	$\overline{\text{RESET}}$	$\overline{\text{RESET}}$	$\overline{\text{RESET}}$	$\overline{\text{RESET}}$
107	$\overline{\text{PRGM}}$	$\overline{\text{PRGM}}$	$\overline{\text{PRGM}}$	$\overline{\text{PRGM}}$	$\overline{\text{PRGM}}$	$\overline{\text{PRGM}}$	$\overline{\text{PRGM}}$	$\overline{\text{PRGM}}$	$\overline{\text{PRGM}}$
108	PR10A	PR12A	PR14A	PR16A	PR18A	PR20A	PR24A	PR30A	I/O-M0
109	PR10B	PR12D	PR13A	PR15A	PR18D	PR19A	PR23A	PR28A	I/O
110	PR10C	PR11A	PR13D	PR15D	PR17B	PR18A	PR22A	PR27A	I/O
111	PR10D	PR11B	PR12A	PR14A	PR16A	PR17A	PR21A	PR26A	I/O
112	PR9A	PR10A	PR11A	PR13B	PR15D	PR16D	PR20D	PR23D	I/O-M1
113	PR9B	PR10B	PR11B	PR13C	PR14A	PR15A	PR19A	PR22A	I/O
114	PR9C	PR10C	PR11C	PR12A	PR14D	PR15D	PR19D	PR22D	I/O-VDD5
115	PR9D	PR10D	PR11D	PR12B	PR13A	PR14A	PR18A	PR21A	I/O
116	VDD	VDD	VDD	VDD	VDD	VDD	VDD	VDD	VDD
117	PR8A	PR9A	PR10A	PR11A	PR12A	PR13A	PR17A	PR20A	I/O-M2
118	PR8B	PR9B	PR10B	PR11B	PR12B	PR13B	PR17D	PR20D	I/O
119	PR8C	PR9C	PR10C	PR11C	PR12C	PR13C	PR16A	PR19A	I/O
120	PR8D	PR9D	PR10D	PR11D	PR12D	PR13D	PR16D	PR19D	I/O
121	PR7A	PR8A	PR9A	PR10A	PR11A	PR12A	PR15A	PR18A	I/O-M3
122	PR7B	PR8B	PR9B	PR10B	PR11B	PR12B	PR15D	PR18D	I/O
123	PR7C	PR8C	PR9C	PR10C	PR11C	PR12C	PR14A	PR17A	I/O
124	PR7D	PR8D	PR9D	PR10D	PR11D	PR12D	PR14D	PR17D	I/O
125	VSS	VSS	VSS	VSS	VSS	VSS	VSS	VSS	VSS
126	PR6A	PR7A	PR8A	PR9A	PR10A	PR11A	PR13A	PR16A	I/O
127	PR6B	PR7B	PR8B	PR9B	PR10B	PR11B	PR13B	PR16B	I/O
128	PR6C	PR7C	PR8C	PR9C	PR10C	PR11C	PR13C	PR16C	I/O
129	PR6D	PR7D	PR8D	PR9D	PR10D	PR11D	PR13D	PR16D	I/O

Notes:

The OR2C04A and OR2T04A do not have bond pads connected to 208-pin SQFP package pin numbers 6, 45, 47, 56, 60, 102, 153, 154, 166, 201, and 203.

The pins labeled I/O-VDD5 are user I/Os for the OR2CxxA and OR2TxxB series, but they are connected to VDD5 for the OR2TxxA series.

Pin Information (continued)

Table 23. OR2C/2T04A, OR2C/2T06A, OR2C/2T08A, OR2C/2T10A, OR2C/2T12A, OR2C/2T15A/B, OR2C/2T26A, and OR2C/2T40A/B 208-Pin SQFP/SQFP2 Pinout (continued)

Pin	2C/2T04A Pad	2C/2T06A Pad	2C/2T08A Pad	2C/2T10A Pad	2C/2T12A Pad	2C/2T15A/B Pad	2C/2T26A Pad	2C/2T40A/B Pad	Function
130	VDD	VDD	VDD	VDD	VDD	VDD	VDD	VDD	VDD
131	PR5A	PR6A	PR7A	PR8A	PR9A	PR10A	PR12A	PR15A	I/O
132	PR5B	PR6B	PR7B	PR8B	PR9B	PR10B	PR12B	PR15B	I/O
133	PR5C	PR6C	PR7C	PR8C	PR9C	PR10C	PR12C	PR15C	I/O
134	PR5D	PR6D	PR7D	PR8D	PR9D	PR10D	PR12D	PR15D	I/O
135	VSS	VSS	VSS	VSS	VSS	VSS	VSS	VSS	VSS
136	PR4A	PR5A	PR6A	PR7A	PR8A	PR9A	PR11A	PR14A	I/O-VDD5
137	PR4B	PR5B	PR6B	PR7B	PR8B	PR9B	PR11D	PR14D	I/O
138	PR4C	PR5C	PR6C	PR7C	PR8C	PR9C	PR10A	PR13A	I/O
139	PR4D	PR5D	PR6D	PR7D	PR8D	PR9D	PR10D	PR13D	I/O
140	PR3A	PR4A	PR5A	PR6A	PR7A	PR8A	PR9A	PR12A	I/O-CS1
141	PR3B	PR4B	PR5B	PR6B	PR7B	PR8B	PR9D	PR12D	I/O
142	PR3C	PR4C	PR5C	PR6C	PR7C	PR8C	PR8A	PR11A	I/O
143	PR3D	PR4D	PR5D	PR6D	PR7D	PR8D	PR8D	PR11D	I/O
144	VDD	VDD	VDD	VDD	VDD	VDD	VDD	VDD	VDD
145	PR2A	PR3A	PR4A	PR5A	PR6A	PR7A	PR7A	PR10A	I/O-$\overline{CS0}$
146	PR2B	PR3B	PR4B	PR4B	PR6B	PR7B	PR7B	PR10B	I/O
147	PR2C	PR3C	PR4C	PR4C	PR5B	PR6B	PR6B	PR9B	I/O
148	PR2D	PR3D	PR4D	PR4D	PR5D	PR6D	PR6D	PR9D	I/O
149	PR1A	PR2A	PR3A	PR3A	PR4A	PR5A	PR5A	PR8A	I/O-$\overline{RD}$
150	PR1B	PR2C	PR3C	PR3C	PR4D	PR5D	PR5D	PR6A	I/O
151	PR1C	PR2D	PR3D	PR3D	PR3A	PR4A	PR4A	PR5A	I/O
152	PR1D	PR1A	PR2A	PR2A	PR2A	PR3A	PR3A	PR4A	I/O-$\overline{WR}$
153	See Note	PR1C	PR2D	PR2D	PR2C	PR2A	PR2A	PR3A	I/O
154	See Note	PR1D	PR1A	PR1A	PR1A	PR1A	PR1A	PR2A	I/O
155	VSS	VSS	VSS	VSS	VSS	VSS	VSS	VSS	VSS
156	$\overline{RD\_CFG}$	$\overline{RD\_CFG}$	$\overline{RD\_CFG}$	$\overline{RD\_CFG}$	$\overline{RD\_CFG}$	$\overline{RD\_CFG}$	$\overline{RD\_CFG}$	$\overline{RD\_CFG}$	$\overline{RD\_CFG}$
157	VSS	VSS	VSS	VSS	VSS	VSS	VSS	VSS	VSS
158	VSS	VSS	VSS	VSS	VSS	VSS	VSS	VSS	VSS
159	PT10D	PT12D	PT14D	PT16D	PT18D	PT20D	PT24D	PT30D	I/O
160	PT10C	PT12A	PT13D	PT15D	PT17D	PT19A	PT23A	PT28A	I/O-RDY/RCLK
161	PT10B	PT11D	PT13A	PT15A	PT16D	PT17D	PT21D	PT26D	I/O
162	PT10A	PT11C	PT12D	PT14D	PT16A	PT17A	PT21A	PT26A	I/O
163	PT9D	PT11A	PT12C	PT13D	PT15D	PT16D	PT20D	PT25D	I/O-D7
164	PT9C	PT10D	PT12A	PT13B	PT14D	PT15D	PT19D	PT24D	I/O-VDD5
165	PT9B	PT10C	PT11D	PT13A	PT14A	PT15A	PT19A	PT23D	I/O
166	See Note	PT10B	PT11C	PT12D	PT13D	PT14D	PT18D	PT22D	I/O
167	PT9A	PT10A	PT11B	PT12B	PT13B	PT14B	PT18B	PT21D	I/O-D6
168	VDD	VDD	VDD	VDD	VDD	VDD	VDD	VDD	VDD
169	PT8D	PT9D	PT10D	PT11D	PT12D	PT13D	PT17D	PT20D	I/O
170	PT8C	PT9C	PT10C	PT11C	PT12C	PT13C	PT17A	PT20A	I/O
171	PT8B	PT9B	PT10B	PT11B	PT12B	PT13B	PT16D	PT19D	I/O
172	PT8A	PT9A	PT10A	PT11A	PT12A	PT13A	PT16A	PT19A	I/O-D5

Notes:

The OR2C04A and OR2T04A do not have bond pads connected to 208-pin SQFP package pin numbers 6, 45, 47, 56, 60, 102, 153, 154, 166, 201, and 203.

The pins labeled I/O-VDD5 are user I/Os for the OR2CxxA and OR2TxxB series, but they are connected to VDD5 for the OR2TxxA series.

Pin Information (continued)

Table 23. OR2C/2T04A, OR2C/2T06A, OR2C/2T08A, OR2C/2T10A, OR2C/2T12A, OR2C/2T15A/B, OR2C/2T26A, and OR2C/2T40A/B 208-Pin SQFP/SQFP2 Pinout (continued)

Pin	2C/2T04A Pad	2C/2T06A Pad	2C/2T08A Pad	2C/2T10A Pad	2C/2T12A Pad	2C/2T15A/B Pad	2C/2T26A Pad	2C/2T40A/B Pad	Function
173	PT7D	PT8D	PT9D	PT10D	PT11D	PT12D	PT15D	PT18D	I/O
174	PT7C	PT8C	PT9C	PT10C	PT11C	PT12C	PT15A	PT18A	I/O
175	PT7B	PT8B	PT9B	PT10B	PT11B	PT12B	PT14D	PT17D	I/O
176	PT7A	PT8A	PT9A	PT10A	PT11A	PT12A	PT14A	PT17A	I/O-D4
177	VSS	VSS	VSS	VSS	VSS	VSS	VSS	VSS	VSS
178	PT6D	PT7D	PT8D	PT9D	PT10D	PT11D	PT13D	PT16D	I/O
179	PT6C	PT7C	PT8C	PT9C	PT10C	PT11C	PT13C	PT16C	I/O
180	PT6B	PT7B	PT8B	PT9B	PT10B	PT11B	PT13B	PT16B	I/O
181	PT6A	PT7A	PT8A	PT9A	PT10A	PT11A	PT13A	PT16A	I/O-D3
182	VSS	VSS	VSS	VSS	VSS	VSS	VSS	VSS	VSS
183	PT5D	PT6D	PT7D	PT8D	PT9D	PT10D	PT12D	PT15D	I/O
184	PT5C	PT6C	PT7C	PT8C	PT9C	PT10C	PT12C	PT15C	I/O
185	PT5B	PT6B	PT7B	PT8B	PT9B	PT10B	PT12B	PT15B	I/O-VDD5
186	PT5A	PT6A	PT7A	PT8A	PT9A	PT10A	PT12A	PT15A	I/O-D2
187	VSS	VSS	VSS	VSS	VSS	VSS	VSS	VSS	VSS
188	PT4D	PT5D	PT6D	PT7D	PT8D	PT9D	PT11D	PT14D	I/O-D1
189	PT4C	PT5C	PT6C	PT7C	PT8C	PT9C	PT11A	PT14A	I/O
190	PT4B	PT5B	PT6B	PT7B	PT8B	PT9B	PT10D	PT13D	I/O
191	PT4A	PT5A	PT6A	PT7A	PT8A	PT9A	PT10A	PT13A	I/O-D0/DIN
192	PT3D	PT4D	PT5D	PT6D	PT7D	PT8D	PT9D	PT12D	I/O
193	PT3C	PT4C	PT5C	PT6C	PT7C	PT8C	PT9A	PT12A	I/O
194	PT3B	PT4B	PT5B	PT6B	PT7B	PT8B	PT8D	PT11D	I/O
195	PT3A	PT4A	PT5A	PT6A	PT7A	PT8A	PT8A	PT11A	I/O-DOUT
196	VDD	VDD	VDD	VDD	VDD	VDD	VDD	VDD	VDD
197	PT2D	PT3D	PT4D	PT5D	PT6D	PT7D	PT7D	PT10D	I/O
198	PT2C	PT3C	PT4C	PT5A	PT6A	PT7A	PT7A	PT9A	I/O
199	PT2B	PT3B	PT4B	PT4D	PT5C	PT6C	PT6C	PT8A	I/O
200	PT2A	PT3A	PT4A	PT4A	PT5A	PT6A	PT6A	PT7A	I/O-TDI
201	See Note	PT2D	PT3D	PT3D	PT4A	PT5A	PT5A	PT6A	I/O
202	PT1D	PT2A	PT3A	PT3A	PT3A	PT4A	PT4A	PT5A	I/O-TMS
203	See Note	PT1D	PT2D	PT2D	PT2C	PT3A	PT3A	PT4A	I/O
204	PT1C	PT1C	PT2A	PT2A	PT2A	PT2A	PT2A	PT3A	I/O
205	PT1B	PT1B	PT1D	PT1D	PT1D	PT1D	PT1D	PT2D	I/O
206	PT1A	PT1A	PT1A	PT1A	PT1A	PT1A	PT1A	PT1A	I/O-TCK
207	VSS	VSS	VSS	VSS	VSS	VSS	VSS	VSS	VSS
208	RD_DATA/ TDO	RD_DATA/ TDO	RD_DATA/ TDO	RD_DATA/ TDO	RD_DATA/ TDO	RD_DATA/ TDO	RD_DATA/ TDO	RD_DATA/ TDO	RD_DATA/TDO

Notes:
The OR2C04A and OR2T04A do not have bond pads connected to 208-pin SQFP package pin numbers 6, 45, 47, 56, 60, 102, 153, 154, 166, 201, and 203.

The pins labeled I/O-VDD5 are user I/Os for the OR2CxxA and OR2TxxB series, but they are connected to VDD5 for the OR2TxxA series.

Pin Information (continued)

Table 24. OR2C/2T06A, OR2C/2T08A, OR2C/2T10A, OR2C/2T12A, OR2C/2T15A/B, OR2C/2T26A, and OR2C/2T40A/B 240-Pin SQFP/SQFP2 Pinout

Pin	2C/2T06A Pad	2C/2T08A Pad	2C/2T10A Pad	2C/2T12A Pad	2C/2T15A/B Pad	2C/2T26A Pad	2C/2T40A/B Pad	Function
1	VSS	VSS	VSS	VSS	VSS	VSS	VSS	VSS
2	VDD	VDD	VDD	VDD	VDD	VDD	VDD	VDD
3	PL1D	PL1D	PL1D	PL1D	PL1D	PL1D	PL1D	I/O
4	PL1C	PL1B	PL1B	PL1C	PL1C	PL1C	PL1A	I/O
5	PL1B	PL1A	PL1A	PL1B	PL1B	PL1B	PL2D	I/O
6	PL1A	PL2D	PL2D	PL2D	PL2D	PL2D	PL3D	I/O-A0
7	VSS	VSS	VSS	VSS	VSS	VSS	VSS	VSS
8	PL2D	PL3D	PL3D	PL3D	PL4D	PL4D	PL5D	I/O-VDD5
9	PL2C	PL3C	PL3C	PL3A	PL4A	PL4A	PL6D	I/O
10	PL2B	PL3B	PL3B	PL4D	PL5D	PL5D	PL7D	I/O
11	PL2A	PL3A	PL3A	PL4A	PL5A	PL5A	PL8D	I/O-A1
12	PL3D	PL4D	PL4A	PL5A	PL6A	PL6A	PL9A	I/O-A2
13	PL3C	PL4C	PL5C	PL6D	PL7D	PL7D	PL10D	I/O
14	PL3B	PL4B	PL5B	PL6B	PL7B	PL7B	PL10B	I/O
15	PL3A	PL4A	PL5A	PL6A	PL7A	PL7A	PL10A	I/O-A3
16	VDD	VDD	VDD	VDD	VDD	VDD	VDD	VDD
17	PL4D	PL5D	PL6D	PL7D	PL8D	PL8D	PL11D	I/O
18	PL4C	PL5C	PL6C	PL7C	PL8C	PL8A	PL11A	I/O
19	PL4B	PL5B	PL6B	PL7B	PL8B	PL9D	PL12D	I/O
20	PL4A	PL5A	PL6A	PL7A	PL8A	PL9A	PL12A	I/O-A4
21	PL5D	PL6D	PL7D	PL8D	PL9D	PL10D	PL13D	I/O-A5
22	PL5C	PL6C	PL7C	PL8C	PL9C	PL10A	PL13A	I/O
23	PL5B	PL6B	PL7B	PL8B	PL9B	PL11D	PL14D	I/O
24	PL5A	PL6A	PL7A	PL8A	PL9A	PL11A	PL14A	I/O-A6
25	VSS	VSS	VSS	VSS	VSS	VSS	VSS	VSS
26	PL6D	PL7D	PL8D	PL9D	PL10D	PL12D	PL15D	I/O
27	PL6C	PL7C	PL8C	PL9C	PL10C	PL12C	PL15C	I/O
28	PL6B	PL7B	PL8B	PL9B	PL10B	PL12B	PL15B	I/O
29	PL6A	PL7A	PL8A	PL9A	PL10A	PL12A	PL15A	I/O-A7
30	VDD	VDD	VDD	VDD	VDD	VDD	VDD	VDD
31	PL7D	PL8D	PL9D	PL10D	PL11D	PL13D	PL16D	I/O
32	PL7C	PL8C	PL9C	PL10C	PL11C	PL13C	PL16C	I/O-VDD5
33	PL7B	PL8B	PL9B	PL10B	PL11B	PL13B	PL16B	I/O
34	PL7A	PL8A	PL9A	PL10A	PL11A	PL13A	PL16A	I/O-A8
35	VSS	VSS	VSS	VSS	VSS	VSS	VSS	VSS
36	PL8D	PL9D	PL10D	PL11D	PL12D	PL14D	PL17D	I/O-A9
37	PL8C	PL9C	PL10C	PL11C	PL12C	PL14A	PL17A	I/O
38	PL8B	PL9B	PL10B	PL11B	PL12B	PL15D	PL18D	I/O
39	PL8A	PL9A	PL10A	PL11A	PL12A	PL15A	PL18A	I/O-A10
40	PL9D	PL10D	PL11D	PL12D	PL13D	PL16D	PL19D	I/O
41	PL9C	PL10C	PL11C	PL12C	PL13C	PL16A	PL19A	I/O
42	PL9B	PL10B	PL11B	PL12B	PL13B	PL17D	PL20D	I/O

Notes:
The OR2C/2T08A and OR2C/2T10A do not have bond pads connected to 240-pin SQFP package pin numbers 113 and 188.

The pins labeled I/O-VDD5 are user I/Os for the OR2CxxA and OR2TxxB series, but they are connected to VDD5 for the OR2TxxA series.

Pin Information (continued)

Table 24. OR2C/2T06A, OR2C/2T08A, OR2C/2T10A, OR2C/2T12A, OR2C/2T15A/B, OR2C/2T26A, and OR2C/2T40A/B 240-Pin SQFP/SQFP2 Pinout (continued)

Pin	2C/2T06A Pad	2C/2T08A Pad	2C/2T10A Pad	2C/2T12A Pad	2C/2T15A/B Pad	2C/2T26A Pad	2C/2T40A/B Pad	Function
43	PL9A	PL10A	PL11A	PL12A	PL13A	PL17A	PL20A	I/O-A11
44	VDD	VDD	VDD	VDD	VDD	VDD	VDD	VDD
45	PL10D	PL11D	PL12D	PL13D	PL14D	PL18D	PL21D	I/O-A12
46	PL10C	PL11C	PL12C	PL13B	PL14B	PL18B	PL21B	I/O
47	PL10B	PL11B	PL12B	PL14D	PL15D	PL19D	PL22D	I/O
48	PL10A	PL11A	PL13D	PL14B	PL15B	PL19B	PL22B	I/O-A13
49	PL11D	PL12D	PL13B	PL14A	PL15A	PL19A	PL22A	I/O
50	PL11C	PL12C	PL13A	PL15D	PL16D	PL20D	PL23D	I/O
51	PL11B	PL12B	PL14D	PL15B	PL16B	PL20B	PL24D	I/O
52	PL11A	PL12A	PL14C	PL16D	PL17D	PL21D	PL25A	I/O-A14
53	VSS	VSS	VSS	VSS	VSS	VSS	VSS	VSS
54	PL12D	PL13D	PL15D	PL17D	PL18D	PL22D	PL27D	I/O
55	PL12C	PL13A	PL15A	PL17A	PL19D	PL23D	PL28D	I/O
56	PL12B	PL14D	PL16D	PL18C	PL19A	PL23A	PL28A	I/O
57	PL12A	PL14A	PL16A	PL18A	PL20A	PL24A	PL30A	I/O-A15
58	VSS	VSS	VSS	VSS	VSS	VSS	VSS	VSS
59	CCLK	CCLK	CCLK	CCLK	CCLK	CCLK	CCLK	CCLK
60	VDD	VDD	VDD	VDD	VDD	VDD	VDD	VDD
61	VSS	VSS	VSS	VSS	VSS	VSS	VSS	VSS
62	VSS	VSS	VSS	VSS	VSS	VSS	VSS	VSS
63	PB1A	PB1A	PB1A	PB1A	PB1A	PB1A	PB1A	I/O-A16
64	PB1B	PB1D	PB1D	PB1D	PB2A	PB2A	PB3A	I/O
65	PB1C	PB2A	PB2A	PB2A	PB2D	PB2D	PB3D	I/O-VDD5
66	PB1D	PB2D	PB2D	PB2D	PB3D	PB3D	PB4D	I/O
67	VSS	VSS	VSS	VSS	VSS	VSS	VSS	VSS
68	PB2A	PB3A	PB3B	PB3D	PB4D	PB4D	PB5D	I/O-A17
69	PB2B	PB3B	PB4B	PB4D	PB5D	PB5D	PB6D	I/O
70	PB2C	PB3C	PB4C	PB5A	PB6A	PB6A	PB7A	I/O
71	PB2D	PB3D	PB4D	PB5B	PB6B	PB6B	PB7D	I/O
72	PB3A	PB4A	PB5A	PB5D	PB6D	PB6D	PB8D	I/O
73	PB3B	PB4B	PB5B	PB6A	PB7A	PB7A	PB9A	I/O
74	PB3C	PB4C	PB5C	PB6B	PB7B	PB7B	PB9D	I/O
75	PB3D	PB4D	PB5D	PB6D	PB7D	PB7D	PB10D	I/O
76	VDD	VDD	VDD	VDD	VDD	VDD	VDD	VDD
77	PB4A	PB5A	PB6A	PB7A	PB8A	PB8A	PB11A	I/O
78	PB4B	PB5B	PB6B	PB7B	PB8B	PB8D	PB11D	I/O
79	PB4C	PB5C	PB6C	PB7C	PB8C	PB9A	PB12A	I/O
80	PB4D	PB5D	PB6D	PB7D	PB8D	PB9D	PB12D	I/O
81	PB5A	PB6A	PB7A	PB8A	PB9A	PB10A	PB13A	I/O
82	PB5B	PB6B	PB7B	PB8B	PB9B	PB10D	PB13D	I/O
83	PB5C	PB6C	PB7C	PB8C	PB9C	PB11A	PB14A	I/O
84	PB5D	PB6D	PB7D	PB8D	PB9D	PB11D	PB14D	I/O

Notes:
The OR2C/2T08A and OR2C/2T10A do not have bond pads connected to 240-pin SQFP package pin numbers 113 and 188.

The pins labeled I/O-VDD5 are user I/Os for the OR2CxxA and OR2TxxB series, but they are connected to VDD5 for the OR2TxxA series.

Pin Information (continued)

Table 24. OR2C/2T06A, OR2C/2T08A, OR2C/2T10A, OR2C/2T12A, OR2C/2T15A/B, OR2C/2T26A, and OR2C/2T40A/B 240-Pin SQFP/SQFP2 Pinout (continued)

Pin	2C/2T06A Pad	2C/2T08A Pad	2C/2T10A Pad	2C/2T12A Pad	2C/2T15A/B Pad	2C/2T26A Pad	2C/2T40A/B Pad	Function
85	VSS	VSS	VSS	VSS	VSS	VSS	VSS	VSS
86	PB6A	PB7A	PB8A	PB9A	PB10A	PB12A	PB15A	I/O
87	PB6B	PB7B	PB8B	PB9B	PB10B	PB12B	PB15B	I/O
88	PB6C	PB7C	PB8C	PB9C	PB10C	PB12C	PB15C	I/O
89	PB6D	PB7D	PB8D	PB9D	PB10D	PB12D	PB15D	I/O
90	VSS	VSS	VSS	VSS	VSS	VSS	VSS	VSS
91	PB7A	PB8A	PB9A	PB10A	PB11A	PB13A	PB16A	I/O
92	PB7B	PB8B	PB9B	PB10B	PB11B	PB13B	PB16B	I/O
93	PB7C	PB8C	PB9C	PB10C	PB11C	PB13C	PB16C	I/O
94	PB7D	PB8D	PB9D	PB10D	PB11D	PB13D	PB16D	I/O
95	VSS	VSS	VSS	VSS	VSS	VSS	VSS	VSS
96	PB8A	PB9A	PB10A	PB11A	PB12A	PB14A	PB17A	I/O-VDD5
97	PB8B	PB9B	PB10B	PB11B	PB12B	PB14D	PB17D	I/O
98	PB8C	PB9C	PB10C	PB11C	PB12C	PB15A	PB18A	I/O
99	PB8D	PB9D	PB10D	PB11D	PB12D	PB15D	PB18D	I/O
100	PB9A	PB10A	PB11A	PB12A	PB13A	PB16A	PB19A	I/O-HDC
101	PB9B	PB10B	PB11B	PB12B	PB13B	PB16D	PB19D	I/O
102	PB9C	PB10C	PB11C	PB12C	PB13C	PB17A	PB20A	I/O
103	PB9D	PB10D	PB11D	PB12D	PB13D	PB17D	PB20D	I/O
104	VDD	VDD	VDD	VDD	VDD	VDD	VDD	VDD
105	PB10A	PB11A	PB12A	PB13A	PB14A	PB18A	PB21A	I/O-$\overline{\text{LDC}}$
106	PB10B	PB11D	PB13A	PB13D	PB14D	PB18D	PB22D	I/O
107	PB10C	PB12A	PB13B	PB14A	PB15A	PB19A	PB23A	I/O
108	PB10D	PB12B	PB13C	PB14D	PB15D	PB19D	PB24D	I/O
109	PB11A	PB12C	PB13D	PB15A	PB16A	PB20A	PB25A	I/O-$\overline{\text{INIT}}$
110	PB11B	PB12D	PB14A	PB15D	PB16D	PB20D	PB25D	I/O
111	PB11C	PB13A	PB15A	PB16A	PB17A	PB21A	PB26A	I/O
112	PB11D	PB13B	PB15B	PB16D	PB17D	PB21D	PB26D	I/O
113	VSS	See Note	See Note	VSS	VSS	VSS	VSS	VSS
114	PB12A	PB13D	PB15D	PB17A	PB18A	PB22A	PB27A	I/O
115	PB12B	PB14A	PB16A	PB17D	PB19A	PB23A	PB28A	I/O
116	PB12C	PB14B	PB16B	PB18A	PB19D	PB23D	PB28D	I/O
117	PB12D	PB14D	PB16D	PB18D	PB20D	PB24D	PB30D	I/O
118	VSS	VSS	VSS	VSS	VSS	VSS	VSS	VSS
119	DONE	DONE	DONE	DONE	DONE	DONE	DONE	DONE
120	VDD	VDD	VDD	VDD	VDD	VDD	VDD	VDD
121	VSS	VSS	VSS	VSS	VSS	VSS	VSS	VSS
122	$\overline{\text{RESET}}$	$\overline{\text{RESET}}$	$\overline{\text{RESET}}$	$\overline{\text{RESET}}$	$\overline{\text{RESET}}$	$\overline{\text{RESET}}$	$\overline{\text{RESET}}$	$\overline{\text{RESET}}$
123	$\overline{\text{PRGM}}$	$\overline{\text{PRGM}}$	$\overline{\text{PRGM}}$	$\overline{\text{PRGM}}$	$\overline{\text{PRGM}}$	$\overline{\text{PRGM}}$	$\overline{\text{PRGM}}$	$\overline{\text{PRGM}}$
124	PR12A	PR14A	PR16A	PR18A	PR20A	PR24A	PR30A	I/O-M0
125	PR12B	PR14D	PR16D	PR18C	PR20D	PR24D	PR29D	I/O
126	PR12C	PR13A	PR15A	PR18D	PR19A	PR23A	PR28A	I/O

Notes:
The OR2C/2T08A and OR2C/2T10A do not have bond pads connected to 240-pin SQFP package pin numbers 113 and 188.

The pins labeled I/O-VDD5 are user I/Os for the OR2CxxA and OR2TxxB series, but they are connected to VDD5 for the OR2TxxA series.

Pin Information (continued)

Table 24. OR2C/2T06A, OR2C/2T08A, OR2C/2T10A, OR2C/2T12A, OR2C/2T15A/B, OR2C/2T26A, and OR2C/2T40A/B 240-Pin SQFP/SQFP2 Pinout (continued)

Pin	2C/2T06A Pad	2C/2T08A Pad	2C/2T10A Pad	2C/2T12A Pad	2C/2T15A/B Pad	2C/2T26A Pad	2C/2T40A/B Pad	Function
127	PR12D	PR13D	PR15D	PR17B	PR18A	PR22A	PR27A	I/O
128	VSS	VSS	VSS	VSS	VSS	VSS	VSS	VSS
129	PR11A	PR12A	PR14A	PR16A	PR17A	PR21A	PR26A	I/O
130	PR11B	PR12B	PR14C	PR16D	PR17D	PR21D	PR25A	I/O
131	PR11C	PR12C	PR14D	PR15A	PR16A	PR20A	PR24A	I/O
132	PR11D	PR12D	PR13A	PR15C	PR16C	PR20C	PR24D	I/O
133	PR10A	PR11A	PR13B	PR15D	PR16D	PR20D	PR23D	I/O-M1
134	PR10B	PR11B	PR13C	PR14A	PR15A	PR19A	PR22A	I/O
135	PR10C	PR11C	PR12A	PR14D	PR15D	PR19D	PR22D	I/O-VDD5
136	PR10D	PR11D	PR12B	PR13A	PR14A	PR18A	PR21A	I/O
137	VDD	VDD	VDD	VDD	VDD	VDD	VDD	VDD
138	PR9A	PR10A	PR11A	PR12A	PR13A	PR17A	PR20A	I/O-M2
139	PR9B	PR10B	PR11B	PR12B	PR13B	PR17D	PR20D	I/O
140	PR9C	PR10C	PR11C	PR12C	PR13C	PR16A	PR19A	I/O
141	PR9D	PR10D	PR11D	PR12D	PR13D	PR16D	PR19D	I/O
142	PR8A	PR9A	PR10A	PR11A	PR12A	PR15A	PR18A	I/O-M3
143	PR8B	PR9B	PR10B	PR11B	PR12B	PR15D	PR18D	I/O
144	PR8C	PR9C	PR10C	PR11C	PR12C	PR14A	PR17A	I/O
145	PR8D	PR9D	PR10D	PR11D	PR12D	PR14D	PR17D	I/O
146	VSS	VSS	VSS	VSS	VSS	VSS	VSS	VSS
147	PR7A	PR8A	PR9A	PR10A	PR11A	PR13A	PR16A	I/O
148	PR7B	PR8B	PR9B	PR10B	PR11B	PR13B	PR16B	I/O
149	PR7C	PR8C	PR9C	PR10C	PR11C	PR13C	PR16C	I/O
150	PR7D	PR8D	PR9D	PR10D	PR11D	PR13D	PR16D	I/O
151	VDD	VDD	VDD	VDD	VDD	VDD	VDD	VDD
152	PR6A	PR7A	PR8A	PR9A	PR10A	PR12A	PR15A	I/O
153	PR6B	PR7B	PR8B	PR9B	PR10B	PR12B	PR15B	I/O
154	PR6C	PR7C	PR8C	PR9C	PR10C	PR12C	PR15C	I/O
155	PR6D	PR7D	PR8D	PR9D	PR10D	PR12D	PR15D	I/O
156	VSS	VSS	VSS	VSS	VSS	VSS	VSS	VSS
157	PR5A	PR6A	PR7A	PR8A	PR9A	PR11A	PR14A	I/O-VDD5
158	PR5B	PR6B	PR7B	PR8B	PR9B	PR11D	PR14D	I/O
159	PR5C	PR6C	PR7C	PR8C	PR9C	PR10A	PR13A	I/O
160	PR5D	PR6D	PR7D	PR8D	PR9D	PR10D	PR13D	I/O
161	PR4A	PR5A	PR6A	PR7A	PR8A	PR9A	PR12A	I/O-CS1
162	PR4B	PR5B	PR6B	PR7B	PR8B	PR9D	PR12D	I/O
163	PR4C	PR5C	PR6C	PR7C	PR8C	PR8A	PR11A	I/O
164	PR4D	PR5D	PR6D	PR7D	PR8D	PR8D	PR11D	I/O
165	VDD	VDD	VDD	VDD	VDD	VDD	VDD	VDD
166	PR3A	PR4A	PR5A	PR6A	PR7A	PR7A	PR10A	I/O-$\overline{CS0}$
167	PR3B	PR4B	PR4B	PR6B	PR7B	PR7B	PR10B	I/O
168	PR3C	PR4C	PR4C	PR5B	PR6B	PR6B	PR9B	I/O

Notes:
The OR2C/2T08A and OR2C/2T10A do not have bond pads connected to 240-pin SQFP package pin numbers 113 and 188.

The pins labeled I/O-VDD5 are user I/Os for the OR2CxxA and OR2TxxB series, but they are connected to VDD5 for the OR2TxxA series.

Pin Information (continued)

Table 24. OR2C/2T06A, OR2C/2T08A, OR2C/2T10A, OR2C/2T12A, OR2C/2T15A/B, OR2C/2T26A, and OR2C/2T40A/B 240-Pin SQFP/SQFP2 Pinout (continued)

Pin	2C/2T06A Pad	2C/2T08A Pad	2C/2T10A Pad	2C/2T12A Pad	2C/2T15A/B Pad	2C/2T26A Pad	2C/2T40A/B Pad	Function
169	PR3D	PR4D	PR4D	PR5D	PR6D	PR6D	PR9D	I/O
170	PR2A	PR3A	PR3A	PR4A	PR5A	PR5A	PR8A	I/O-$\overline{RD}$
171	PR2B	PR3B	PR3B	PR4B	PR5B	PR5B	PR7A	I/O
172	PR2C	PR3C	PR3C	PR4D	PR5D	PR5D	PR6A	I/O
173	PR2D	PR3D	PR3D	PR3A	PR4A	PR4A	PR5A	I/O
174	VSS	VSS	VSS	VSS	VSS	VSS	VSS	VSS
175	PR1A	PR2A	PR2A	PR2A	PR3A	PR3A	PR4A	I/O-$\overline{WR}$
176	PR1B	PR2D	PR2D	PR2C	PR2A	PR2A	PR3A	I/O
177	PR1C	PR1A	PR1A	PR1A	PR1A	PR1A	PR2A	I/O
178	PR1D	PR1D	PR1D	PR1D	PR1D	PR1D	PR1D	I/O
179	VSS	VSS	VSS	VSS	VSS	VSS	VSS	VSS
180	$\overline{RD\_CFGN}$	$\overline{RD\_CFGN}$	$\overline{RD\_CFGN}$	$\overline{RD\_CFGN}$	$\overline{RD\_CFGN}$	$\overline{RD\_CFGN}$	$\overline{RD\_CFGN}$	$\overline{RD\_CFGN}$
181	VSS	VSS	VSS	VSS	VSS	VSS	VSS	VSS
182	VDD	VDD	VDD	VDD	VDD	VDD	VDD	VDD
183	VSS	VSS	VSS	VSS	VSS	VSS	VSS	VSS
184	PT12D	PT14D	PT16D	PT18D	PT20D	PT24D	PT30D	I/O
185	PT12C	PT14C	PT16C	PT18B	PT20A	PT24A	PT29A	I/O
186	PT12B	PT14A	PT16A	PT18A	PT19D	PT23D	PT28D	I/O
187	PT12A	PT13D	PT15D	PT17D	PT19A	PT23A	PT28A	I/O-RDY/RCLK
188	VSS	See Note	See Note	VSS	VSS	VSS	VSS	VSS
189	PT11D	PT13B	PT15B	PT16D	PT17D	PT21D	PT26D	I/O
190	PT11C	PT13A	PT15A	PT16C	PT17C	PT21C	PT26C	I/O
191	PT11B	PT12D	PT14D	PT16A	PT17A	PT21A	PT26A	I/O
192	PT11A	PT12C	PT13D	PT15D	PT16D	PT20D	PT25D	I/O-D7
193	PT10D	PT12A	PT13B	PT14D	PT15D	PT19D	PT24D	I/O-VDD5
194	PT10C	PT11D	PT13A	PT14A	PT15A	PT19A	PT23D	I/O
195	PT10B	PT11C	PT12D	PT13D	PT14D	PT18D	PT22D	I/O
196	PT10A	PT11B	PT12B	PT13B	PT14B	PT18B	PT21D	I/O-D6
197	VDD	VDD	VDD	VDD	VDD	VDD	VDD	VDD
198	PT9D	PT10D	PT11D	PT12D	PT13D	PT17D	PT20D	I/O
199	PT9C	PT10C	PT11C	PT12C	PT13C	PT17A	PT20A	I/O
200	PT9B	PT10B	PT11B	PT12B	PT13B	PT16D	PT19D	I/O
201	PT9A	PT10A	PT11A	PT12A	PT13A	PT16A	PT19A	I/O-D5
202	PT8D	PT9D	PT10D	PT11D	PT12D	PT15D	PT18D	I/O
203	PT8C	PT9C	PT10C	PT11C	PT12C	PT15A	PT18A	I/O
204	PT8B	PT9B	PT10B	PT11B	PT12B	PT14D	PT17D	I/O
205	PT8A	PT9A	PT10A	PT11A	PT12A	PT14A	PT17A	I/O-D4
206	VSS	VSS	VSS	VSS	VSS	VSS	VSS	VSS
207	PT7D	PT8D	PT9D	PT10D	PT11D	PT13D	PT16D	I/O
208	PT7C	PT8C	PT9C	PT10C	PT11C	PT13C	PT16C	I/O
209	PT7B	PT8B	PT9B	PT10B	PT11B	PT13B	PT16B	I/O
210	PT7A	PT8A	PT9A	PT10A	PT11A	PT13A	PT16A	I/O-D3

Notes:
The OR2C/2T08A and OR2C/2T10A do not have bond pads connected to 240-pin SQFP package pin numbers 113 and 188.

The pins labeled I/O-VDD5 are user I/Os for the OR2CxxA and OR2TxxB series, but they are connected to VDD5 for the OR2TxxA series.

Pin Information (continued)

Table 24. OR2C/2T06A, OR2C/2T08A, OR2C/2T10A, OR2C/2T12A, OR2C/2T15A/B, OR2C/2T26A, and OR2C/2T40A/B 240-Pin SQFP/SQFP2 Pinout (continued)

Pin	2C/2T06A Pad	2C/2T08A Pad	2C/2T10A Pad	2C/2T12A Pad	2C/2T15A/B Pad	2C/2T26A Pad	2C/2T40A/B Pad	Function
211	VSS	VSS	VSS	VSS	VSS	VSS	VSS	VSS
212	PT6D	PT7D	PT8D	PT9D	PT10D	PT12D	PT15D	I/O
213	PT6C	PT7C	PT8C	PT9C	PT10C	PT12C	PT15C	I/O
214	PT6B	PT7B	PT8B	PT9B	PT10B	PT12B	PT15B	I/O-VDD5
215	PT6A	PT7A	PT8A	PT9A	PT10A	PT12A	PT15A	I/O-D2
216	VSS	VSS	VSS	VSS	VSS	VSS	VSS	VSS
217	PT5D	PT6D	PT7D	PT8D	PT9D	PT11D	PT14D	I/O-D1
218	PT5C	PT6C	PT7C	PT8C	PT9C	PT11A	PT14A	I/O
219	PT5B	PT6B	PT7B	PT8B	PT9B	PT10D	PT13D	I/O
220	PT5A	PT6A	PT7A	PT8A	PT9A	PT10A	PT13A	I/O-D0/DIN
221	PT4D	PT5D	PT6D	PT7D	PT8D	PT9D	PT12D	I/O
222	PT4C	PT5C	PT6C	PT7C	PT8C	PT9A	PT12A	I/O
223	PT4B	PT5B	PT6B	PT7B	PT8B	PT8D	PT11D	I/O
224	PT4A	PT5A	PT6A	PT7A	PT8A	PT8A	PT11A	I/O-DOUT
225	VDD	VDD	VDD	VDD	VDD	VDD	VDD	VDD
226	PT3D	PT4D	PT5D	PT6D	PT7D	PT7D	PT10D	I/O
227	PT3C	PT4C	PT5A	PT6A	PT7A	PT7A	PT9A	I/O
228	PT3B	PT4B	PT4D	PT5C	PT6C	PT6C	PT8A	I/O
229	PT3A	PT4A	PT4A	PT5A	PT6A	PT6A	PT7A	I/O-TDI
230	PT2D	PT3D	PT3D	PT4D	PT5D	PT5D	PT6D	I/O
231	PT2C	PT3C	PT3C	PT4A	PT5A	PT5A	PT6A	I/O
232	PT2B	PT3B	PT3B	PT3D	PT4D	PT4D	PT5D	I/O
233	PT2A	PT3A	PT3A	PT3A	PT4A	PT4A	PT5A	I/O-TMS
234	VSS	VSS	VSS	VSS	VSS	VSS	VSS	VSS
235	PT1D	PT2D	PT2D	PT2C	PT3A	PT3A	PT4A	I/O
236	PT1C	PT2A	PT2A	PT2A	PT2A	PT2A	PT3A	I/O
237	PT1B	PT1D	PT1D	PT1D	PT1D	PT1D	PT2D	I/O
238	PT1A	PT1A	PT1A	PT1A	PT1A	PT1A	PT1A	I/O-TCK
239	VSS	VSS	VSS	VSS	VSS	VSS	VSS	VSS
240	RD_DATA/ TDO	RD_DATA/ TDO	RD_DATA/ TDO	RD_DATA/ TDO	RD_DATA/ TDO	RD_DATA/ TDO	RD_DATA/ TDO	RD_DATA/TDO

Notes:
The OR2C/2T08A and OR2C/2T10A do not have bond pads connected to 240-pin SQFP package pin numbers 113 and 188.

The pins labeled I/O-VDD5 are user I/Os for the OR2CxxA and OR2TxxB series, but they are connected to VDD5 for the OR2TxxA series.

Pin Information (continued)

Table 25. OR2C/2T06A, OR2C/2T08A, OR2C/2T10A, OR2C/2T12A, and OR2C/2T15A/B 256-Pin PBGA Pinout

Pin	2C/2T06A Pad	2C/2T08A Pad	2C/2T10A Pad	2C/2T12A Pad	2C/2T15A/B Pad	Function
C2	PL1D	PL1D	PL1D	PL1D	PL1D	I/O
D2	PL1C	PL1B	PL1B	PL1C	PL1C	I/O
D3	PL1B	PL1A	PL1A	PL1B	PL1B	I/O
E4	PL1A	PL2D	PL2D	PL2D	PL2D	I/O-A0
C1	—	PL2C	PL2C	PL2C	PL2A	I/O
D1	—	PL2B	PL2B	PL2B	PL3D	I/O
E3	—	PL2A	PL2A	PL2A	PL3A	I/O
E2	PL2D	PL3D	PL3D	PL3D	PL4D	I/O-$V_{DD}5$
E1	PL2C	PL3C	PL3C	PL3A	PL4A	I/O
F3	PL2B	PL3B	PL3B	PL4D	PL5D	I/O
G4	PL2A	PL3A	PL3A	PL4A	PL5A	I/O-A1
F2	—	—	PL4D	PL5D	PL6D	I/O
F1	PL3D	PL4D	PL4A	PL5A	PL6A	I/O-A2
G3	PL3C	PL4C	PL5C	PL6D	PL7D	I/O
G2	PL3B	PL4B	PL5B	PL6B	PL7B	I/O
G1	PL3A	PL4A	PL5A	PL6A	PL7A	I/O-A3
H3	PL4D	PL5D	PL6D	PL7D	PL8D	I/O
H2	PL4C	PL5C	PL6C	PL7C	PL8C	I/O
H1	PL4B	PL5B	PL6B	PL7B	PL8B	I/O
J4	PL4A	PL5A	PL6A	PL7A	PL8A	I/O-A4
J3	PL5D	PL6D	PL7D	PL8D	PL9D	I/O-A5
J2	PL5C	PL6C	PL7C	PL8C	PL9C	I/O
J1	PL5B	PL6B	PL7B	PL8B	PL9B	I/O
K2	PL5A	PL6A	PL7A	PL8A	PL9A	I/O-A6
K3	PL6D	PL7D	PL8D	PL9D	PL10D	I/O
K1	PL6C	PL7C	PL8C	PL9C	PL10C	I/O
L1	PL6B	PL7B	PL8B	PL9B	PL10B	I/O
L2	PL6A	PL7A	PL8A	PL9A	PL10A	I/O-A7
L3	PL7D	PL8D	PL9D	PL10D	PL11D	I/O
L4	PL7C	PL8C	PL9C	PL10C	PL11C	I/O-$V_{DD}5$
M1	PL7B	PL8B	PL9B	PL10B	PL11B	I/O
M2	PL7A	PL8A	PL9A	PL10A	PL11A	I/O-A8
M3	PL8D	PL9D	PL10D	PL11D	PL12D	I/O-A9
M4	PL8C	PL9C	PL10C	PL11C	PL12C	I/O
N1	PL8B	PL9B	PL10B	PL11B	PL12B	I/O
N2	PL8A	PL9A	PL10A	PL11A	PL12A	I/O-A10
N3	PL9D	PL10D	PL11D	PL12D	PL13D	I/O
P1	PL9C	PL10C	PL11C	PL12C	PL13C	I/O
P2	PL9B	PL10B	PL11B	PL12B	PL13B	I/O
R1	PL9A	PL10A	PL11A	PL12A	PL13A	I/O-A11

Notes:
The W3 pin on the 256-pin PBGA package is unconnected for all devices listed in this table.

The OR2C/2T08A do not have bond pads connected to the 256-pin PBGA package pins F2 and Y17.

The pins labeled I/O-$V_{DD}5$ are user I/Os for the OR2CxxA and OR2TxxB series, but they are connected to $V_{DD}5$ for the OR2TxxA series.

The pins labeled V_{SS}-ETC are the 4 x 4 array of thermal balls located at the center of the package. The balls can be attached to the ground plane of the board for enhanced thermal capability (see Table 29), or they can be left unconnected.

Pin Information (continued)

Table 25. OR2C/2T06A, OR2C/2T08A, OR2C/2T10A, OR2C/2T12A, and OR2C/2T15A/B 256-Pin PBGA Pinout (continued)

Pin	2C/2T06A Pad	2C/2T08A Pad	2C/2T10A Pad	2C/2T12A Pad	2C/2T15A/B Pad	Function
P3	PL10D	PL11D	PL12D	PL13D	PL14D	I/O-A12
R2	PL10C	PL11C	PL12C	PL13B	PL14B	I/O
T1	PL10B	PL11B	PL12B	PL14D	PL15D	I/O
P4	PL10A	PL11A	PL13D	PL14B	PL15B	I/O-A13
R3	PL11D	PL12D	PL13B	PL14A	PL15A	I/O
T2	PL11C	PL12C	PL13A	PL15D	PL16D	I/O
U1	PL11B	PL12B	PL14D	PL15B	PL16B	I/O
T3	PL11A	PL12A	PL14C	PL16D	PL17D	I/O-A14
U2	—	PL13D	PL15D	PL17D	PL18D	I/O-$V_{DD}5$
V1	PL12D	PL13C	PL15C	PL17C	PL18C	I/O
T4	PL12C	PL13B	PL15B	PL17B	PL18A	I/O
U3	PL12B	PL13A	PL15A	PL17A	PL19D	I/O
V2	—	PL14D	PL16D	PL18D	PL19C	I/O
W1	—	PL14C	PL16C	PL18C	PL19A	I/O
V3	—	PL14B	PL16B	PL18B	PL20D	I/O
W2	PL12A	PL14A	PL16A	PL18A	PL20A	I/O-A15
Y1	CCLK	CCLK	CCLK	CCLK	CCLK	CCLK
Y2	PB1A	PB1A	PB1A	PB1A	PB1A	I/O-A16
W4	—	PB1C	PB1C	PB1C	PB1D	I/O
V4	PB1B	PB1D	PB1D	PB1D	PB2A	I/O
U5	PB1C	PB2A	PB2A	PB2A	PB2D	I/O-$V_{DD}5$
Y3	PB1D	PB2B	PB2B	PB2B	PB3A	I/O
Y4	—	PB2C	PB2C	PB2C	PB3C	I/O
V5	—	PB2D	PB2D	PB2D	PB3D	I/O
W5	PB2A	PB3A	PB3B	PB3D	PB4D	I/O-A17
Y5	PB2B	PB3B	PB4B	PB4D	PB5D	I/O
V6	PB2C	PB3C	PB4C	PB5A	PB6A	I/O
U7	PB2D	PB3D	PB4D	PB5B	PB6B	I/O
W6	PB3A	PB4A	PB5A	PB5D	PB6D	I/O
Y6	PB3B	PB4B	PB5B	PB6A	PB7A	I/O
V7	PB3C	PB4C	PB5C	PB6B	PB7B	I/O
W7	PB3D	PB4D	PB5D	PB6D	PB7D	I/O
Y7	PB4A	PB5A	PB6A	PB7A	PB8A	I/O
V8	PB4B	PB5B	PB6B	PB7B	PB8B	I/O
W8	PB4C	PB5C	PB6C	PB7C	PB8C	I/O
Y8	PB4D	PB5D	PB6D	PB7D	PB8D	I/O
U9	PB5A	PB6A	PB7A	PB8A	PB9A	I/O
V9	PB5B	PB6B	PB7B	PB8B	PB9B	I/O
W9	PB5C	PB6C	PB7C	PB8C	PB9C	I/O
Y9	PB5D	PB6D	PB7D	PB8D	PB9D	I/O

Notes:
The W3 pin on the 256-pin PBGA package is unconnected for all devices listed in this table.

The OR2C/2T08A do not have bond pads connected to the 256-pin PBGA package pins F2 and Y17.

The pins labeled I/O-$V_{DD}5$ are user I/Os for the OR2CxxA and OR2TxxB series, but they are connected to $V_{DD}5$ for the OR2TxxA series.

The pins labeled V_{SS}-ETC are the 4 x 4 array of thermal balls located at the center of the package. The balls can be attached to the ground plane of the board for enhanced thermal capability (see Table 29), or they can be left unconnected.

Pin Information (continued)

Table 25. OR2C/2T06A, OR2C/2T08A, OR2C/2T10A, OR2C/2T12A, and OR2C/2T15A/B 256-Pin PBGA Pinout (continued)

Pin	2C/2T06A Pad	2C/2T08A Pad	2C/2T10A Pad	2C/2T12A Pad	2C/2T15A/B Pad	Function
W10	PB6A	PB7A	PB8A	PB9A	PB10A	I/O
V10	PB6B	PB7B	PB8B	PB9B	PB10B	I/O
Y10	PB6C	PB7C	PB8C	PB9C	PB10C	I/O
Y11	PB6D	PB7D	PB8D	PB9D	PB10D	I/O
W11	PB7A	PB8A	PB9A	PB10A	PB11A	I/O
V11	PB7B	PB8B	PB9B	PB10B	PB11B	I/O
U11	PB7C	PB8C	PB9C	PB10C	PB11C	I/O
Y12	PB7D	PB8D	PB9D	PB10D	PB11D	I/O
W12	PB8A	PB9A	PB10A	PB11A	PB12A	I/O-$V_{DD}5$
V12	PB8B	PB9B	PB10B	PB11B	PB12B	I/O
U12	PB8C	PB9C	PB10C	PB11C	PB12C	I/O
Y13	PB8D	PB9D	PB10D	PB11D	PB12D	I/O
W13	PB9A	PB10A	PB11A	PB12A	PB13A	I/O-HDC
V13	PB9B	PB10B	PB11B	PB12B	PB13B	I/O
Y14	PB9C	PB10C	PB11C	PB12C	PB13C	I/O
W14	PB9D	PB10D	PB11D	PB12D	PB13D	I/O
Y15	PB10A	PB11A	PB12A	PB13A	PB14A	I/O-$\overline{LDC}$
V14	PB10B	PB11B	PB12C	PB13B	PB14B	I/O
W15	PB10C	PB11C	PB12D	PB13C	PB14C	I/O
Y16	PB10D	PB11D	PB13A	PB13D	PB14D	I/O
U14	—	PB12A	PB13B	PB14A	PB15A	I/O
V15	—	PB12B	PB13C	PB14D	PB15D	I/O
W16	PB11A	PB12C	PB13D	PB15A	PB16A	I/O-$\overline{INIT}$
Y17	—	—	PB14A	PB15D	PB16D	I/O
V16	—	PB12D	PB14B	PB16A	PB17A	I/O-$V_{DD}5$
W17	PB11B	PB13A	PB15A	PB16D	PB17D	I/O
Y18	PB11C	PB13B	PB15B	PB17A	PB18A	I/O
U16	PB11D	PB13C	PB15C	PB17C	PB18D	I/O
V17	PB12A	PB13D	PB15D	PB17D	PB19A	I/O
W18	PB12B	PB14A	PB16A	PB18A	PB19D	I/O
Y19	PB12C	PB14B	PB16B	PB18B	PB20A	I/O
V18	PB12D	PB14C	PB16C	PB18C	PB20B	I/O
W19	—	PB14D	PB16D	PB18D	PB20D	I/O
Y20	DONE	DONE	DONE	DONE	DONE	DONE
W20	$\overline{RESET}$	$\overline{RESET}$	$\overline{RESET}$	$\overline{RESET}$	$\overline{RESET}$	$\overline{RESET}$
V19	$\overline{PRGM}$	$\overline{PRGM}$	$\overline{PRGM}$	$\overline{PRGM}$	$\overline{PRGM}$	$\overline{PRGM}$
U19	PR12A	PR14A	PR16A	PR18A	PR20A	I/O-M0
U18	—	PR14C	PR16C	PR18C	PR20D	I/O
T17	—	PR14D	PR16D	PR18D	PR19A	I/O
V20	—	PR13A	PR15A	PR17A	PR19D	I/O

Notes:
The W3 pin on the 256-pin PBGA package is unconnected for all devices listed in this table.

The OR2C/2T08A do not have bond pads connected to the 256-pin PBGA package pins F2 and Y17.

The pins labeled I/O-$V_{DD}5$ are user I/Os for the OR2CxxA and OR2TxxB series, but they are connected to $V_{DD}5$ for the OR2TxxA series.

The pins labeled V_{SS}-ETC are the 4 x 4 array of thermal balls located at the center of the package. The balls can be attached to the ground plane of the board for enhanced thermal capability (see Table 29), or they can be left unconnected.

Pin Information (continued)

Table 25. OR2C/2T06A, OR2C/2T08A, OR2C/2T10A, OR2C/2T12A, and OR2C/2T15A/B 256-Pin PBGA Pinout (continued)

Pin	2C/2T06A Pad	2C/2T08A Pad	2C/2T10A Pad	2C/2T12A Pad	2C/2T15A/B Pad	Function
U20	PR12B	PR13B	PR15B	PR17B	PR18A	I/O
T18	PR12C	PR13C	PR15C	PR17C	PR18B	I/O
T19	PR12D	PR13D	PR15D	PR17D	PR18D	I/O
T20	PR11A	PR12A	PR14A	PR16A	PR17A	I/O
R18	PR11B	PR12B	PR14C	PR16D	PR17D	I/O
P17	PR11C	PR12C	PR14D	PR15A	PR16A	I/O
R19	PR11D	PR12D	PR13A	PR15C	PR16C	I/O
R20	PR10A	PR11A	PR13B	PR15D	PR16D	I/O-M1
P18	PR10B	PR11B	PR13C	PR14A	PR15A	I/O
P19	PR10C	PR11C	PR12A	PR14D	PR15D	I/O-$V_{DD}5$
P20	PR10D	PR11D	PR12B	PR13A	PR14A	I/O
N18	PR9A	PR10A	PR11A	PR12A	PR13A	I/O-M2
N19	PR9B	PR10B	PR11B	PR12B	PR13B	I/O
N20	PR9C	PR10C	PR11C	PR12C	PR13C	I/O
M17	PR9D	PR10D	PR11D	PR12D	PR13D	I/O
M18	PR8A	PR9A	PR10A	PR11A	PR12A	I/O-M3
M19	PR8B	PR9B	PR10B	PR11B	PR12B	I/O
M20	PR8C	PR9C	PR10C	PR11C	PR12C	I/O
L19	PR8D	PR9D	PR10D	PR11D	PR12D	I/O
L18	PR7A	PR8A	PR9A	PR10A	PR11A	I/O
L20	PR7B	PR8B	PR9B	PR10B	PR11B	I/O
K20	PR7C	PR8C	PR9C	PR10C	PR11C	I/O
K19	PR7D	PR8D	PR9D	PR10D	PR11D	I/O
K18	PR6A	PR7A	PR8A	PR9A	PR10A	I/O
K17	PR6B	PR7B	PR8B	PR9B	PR10B	I/O
J20	PR6C	PR7C	PR8C	PR9C	PR10C	I/O
J19	PR6D	PR7D	PR8D	PR9D	PR10D	I/O
J18	PR5A	PR6A	PR7A	PR8A	PR9A	I/O-$V_{DD}5$
J17	PR5B	PR6B	PR7B	PR8B	PR9B	I/O
H20	PR5C	PR6C	PR7C	PR8C	PR9C	I/O
H19	PR5D	PR6D	PR7D	PR8D	PR9D	I/O
H18	PR4A	PR5A	PR6A	PR7A	PR8A	I/O-CS1
G20	PR4B	PR5B	PR6B	PR7B	PR8B	I/O
G19	PR4C	PR5C	PR6C	PR7C	PR8C	I/O
F20	PR4D	PR5D	PR6D	PR7D	PR8D	I/O
G18	PR3A	PR4A	PR5A	PR6A	PR7A	I/O-$\overline{CS0}$
F19	PR3B	PR4B	PR4B	PR6B	PR7B	I/O
E20	PR3C	PR4C	PR4C	PR5B	PR6B	I/O
G17	PR3D	PR4D	PR4D	PR5D	PR6D	I/O
F18	PR2A	PR3A	PR3A	PR4A	PR5A	I/O-$\overline{RD}$

Notes:
The W3 pin on the 256-pin PBGA package is unconnected for all devices listed in this table.

The OR2C/2T08A do not have bond pads connected to the 256-pin PBGA package pins F2 and Y17.

The pins labeled I/O-$V_{DD}5$ are user I/Os for the OR2CxxA and OR2TxxB series, but they are connected to $V_{DD}5$ for the OR2TxxA series.

The pins labeled V_{SS}-ETC are the 4 x 4 array of thermal balls located at the center of the package. The balls can be attached to the ground plane of the board for enhanced thermal capability (see Table 29), or they can be left unconnected.

Pin Information (continued)

Table 25. OR2C/2T06A, OR2C/2T08A, OR2C/2T10A, OR2C/2T12A, and OR2C/2T15A/B 256-Pin PBGA Pinout (continued)

Pin	2C/2T06A Pad	2C/2T08A Pad	2C/2T10A Pad	2C/2T12A Pad	2C/2T15A/B Pad	Function
E19	PR2B	PR3B	PR3B	PR4B	PR5B	I/O
D20	PR2C	PR3C	PR3C	PR4D	PR5D	I/O
E18	PR2D	PR3D	PR3D	PR3A	PR4A	I/O-$V_{DD}5$
D19	PR1A	PR2A	PR2A	PR2A	PR3A	I/O-$\overline{WR}$
C20	PR1B	PR2B	PR2B	PR2B	PR3B	I/O
E17	PR1C	PR2C	PR2C	PR2C	PR2A	I/O
D18	PR1D	PR2D	PR2D	PR2D	PR2D	I/O
C19	—	PR1A	PR1A	PR1A	PR1A	I/O
B20	—	PR1B	PR1B	PR1B	PR1B	I/O
C18	—	PR1C	PR1C	PR1C	PR1C	I/O
B19	—	PR1D	PR1D	PR1D	PR1D	I/O
A20	$\overline{RD\_CFGN}$	$\overline{RD\_CFGN}$	$\overline{RD\_CFGN}$	$\overline{RD\_CFGN}$	$\overline{RD\_CFGN}$	$\overline{RD\_CFGN}$
A19	—	PT14D	PT16D	PT18D	PT20D	I/O
B18	PT12D	PT14C	PT16C	PT18C	PT20C	I/O
B17	PT12C	PT14B	PT16B	PT18B	PT20A	I/O
C17	PT12B	PT14A	PT16A	PT18A	PT19D	I/O
D16	PT12A	PT13D	PT15D	PT17D	PT19A	I/O-RDY/RCLK
A18	—	PT13C	PT15C	PT17A	PT18A	I/O
A17	PT11D	PT13B	PT15B	PT16D	PT17D	I/O
C16	PT11C	PT13A	PT15A	PT16C	PT17C	I/O
B16	PT11B	PT12D	PT14D	PT16A	PT17A	I/O
A16	PT11A	PT12C	PT13D	PT15D	PT16D	I/O-D7
C15	—	PT12B	PT13C	PT15A	PT16A	I/O
D14	PT10D	PT12A	PT13B	PT14D	PT15D	I/O-$V_{DD}5$
B15	PT10C	PT11D	PT13A	PT14A	PT15A	I/O
A15	PT10B	PT11C	PT12D	PT13D	PT14D	I/O
C14	PT10A	PT11B	PT12B	PT13B	PT14B	I/O-D6
B14	PT9D	PT11A	PT12A	PT13A	PT14A	I/O
A14	PT9C	PT10D	PT11D	PT12D	PT13D	I/O
C13	—	PT10C	PT11C	PT12C	PT13C	I/O
B13	PT9B	PT10B	PT11B	PT12B	PT13B	I/O
A13	PT9A	PT10A	PT11A	PT12A	PT13A	I/O-D5
D12	PT8D	PT9D	PT10D	PT11D	PT12D	I/O
C12	PT8C	PT9C	PT10C	PT11C	PT12C	I/O
B12	PT8B	PT9B	PT10B	PT11B	PT12B	I/O
A12	PT8A	PT9A	PT10A	PT11A	PT12A	I/O-D4
B11	PT7D	PT8D	PT9D	PT10D	PT11D	I/O
C11	PT7C	PT8C	PT9C	PT10C	PT11C	I/O
A11	PT7B	PT8B	PT9B	PT10B	PT11B	I/O
A10	PT7A	PT8A	PT9A	PT10A	PT11A	I/O-D3

Notes:
The W3 pin on the 256-pin PBGA package is unconnected for all devices listed in this table.

The OR2C/2T08A do not have bond pads connected to the 256-pin PBGA package pins F2 and Y17.

The pins labeled I/O-$V_{DD}5$ are user I/Os for the OR2CxxA and OR2TxxB series, but they are connected to $V_{DD}5$ for the OR2TxxA series.

The pins labeled V_{SS}-ETC are the 4 x 4 array of thermal balls located at the center of the package. The balls can be attached to the ground plane of the board for enhanced thermal capability (see Table 29), or they can be left unconnected.

Pin Information (continued)

Table 25. OR2C/2T06A, OR2C/2T08A, OR2C/2T10A, OR2C/2T12A, and OR2C/2T15A/B 256-Pin PBGA Pinout (continued)

Pin	2C/2T06A Pad	2C/2T08A Pad	2C/2T10A Pad	2C/2T12A Pad	2C/2T15A/B Pad	Function
B10	PT6D	PT7D	PT8D	PT9D	PT10D	I/O
C10	PT6C	PT7C	PT8C	PT9C	PT10C	I/O
D10	PT6B	PT7B	PT8B	PT9B	PT10B	I/O-$V_{DD}5$
A9	PT6A	PT7A	PT8A	PT9A	PT10A	I/O-D2
B9	PT5D	PT6D	PT7D	PT8D	PT9D	I/O-D1
C9	PT5C	PT6C	PT7C	PT8C	PT9C	I/O
D9	PT5B	PT6B	PT7B	PT8B	PT9B	I/O
A8	PT5A	PT6A	PT7A	PT8A	PT9A	I/O-D0/DIN
B8	PT4D	PT5D	PT6D	PT7D	PT8D	I/O
C8	PT4C	PT5C	PT6C	PT7C	PT8C	I/O
A7	PT4B	PT5B	PT6B	PT7B	PT8B	I/O
B7	PT4A	PT5A	PT6A	PT7A	PT8A	I/O-DOUT
A6	PT3D	PT4D	PT5D	PT6D	PT7D	I/O
C7	PT3C	PT4C	PT5A	PT6A	PT7A	I/O
B6	PT3B	PT4B	PT4D	PT5C	PT6C	I/O
A5	PT3A	PT4A	PT4A	PT5A	PT6A	I/O-TDI
D7	PT2D	PT3D	PT3D	PT4D	PT5D	I/O
C6	PT2C	PT3C	PT3C	PT4A	PT5A	I/O-$V_{DD}5$
B5	PT2B	PT3B	PT3B	PT3D	PT4D	I/O
A4	PT2A	PT3A	PT3A	PT3A	PT4A	I/O-TMS
C5	—	PT2D	PT2D	PT2D	PT3D	I/O
B4	PT1D	PT2C	PT2C	PT2C	PT3A	I/O
A3	PT1C	PT2B	PT2B	PT2B	PT2D	I/O
D5	PT1B	PT2A	PT2A	PT2A	PT2A	I/O
C4	—	PT1D	PT1D	PT1D	PT1D	I/O
B3	—	PT1C	PT1C	PT1C	PT1C	I/O
B2	—	PT1B	PT1B	PT1B	PT1B	I/O
A2	PT1A	PT1A	PT1A	PT1A	PT1A	I/O-TCK
C3	RD_DATA/TDO	RD_DATA/TDO	RD_DATA/TDO	RD_DATA/TDO	RD_DATA/TDO	RD_DATA/TDO
A1	V_{SS}	V_{SS}	V_{SS}	V_{SS}	V_{SS}	V_{SS}
D4	V_{SS}	V_{SS}	V_{SS}	V_{SS}	V_{SS}	V_{SS}
D8	V_{SS}	V_{SS}	V_{SS}	V_{SS}	V_{SS}	V_{SS}
D13	V_{SS}	V_{SS}	V_{SS}	V_{SS}	V_{SS}	V_{SS}
D17	V_{SS}	V_{SS}	V_{SS}	V_{SS}	V_{SS}	V_{SS}
H4	V_{SS}	V_{SS}	V_{SS}	V_{SS}	V_{SS}	V_{SS}
H17	V_{SS}	V_{SS}	V_{SS}	V_{SS}	V_{SS}	V_{SS}
N4	V_{SS}	V_{SS}	V_{SS}	V_{SS}	V_{SS}	V_{SS}
N17	V_{SS}	V_{SS}	V_{SS}	V_{SS}	V_{SS}	V_{SS}
U4	V_{SS}	V_{SS}	V_{SS}	V_{SS}	V_{SS}	V_{SS}

Notes:
The W3 pin on the 256-pin PBGA package is unconnected for all devices listed in this table.

The OR2C/2T08A do not have bond pads connected to the 256-pin PBGA package pins F2 and Y17.

The pins labeled I/O-$V_{DD}5$ are user I/Os for the OR2CxxA and OR2TxxB series, but they are connected to $V_{DD}5$ for the OR2TxxA series.

The pins labeled V_{SS}-ETC are the 4 x 4 array of thermal balls located at the center of the package. The balls can be attached to the ground plane of the board for enhanced thermal capability (see Table 29), or they can be left unconnected.

Pin Information (continued)

Table 25. OR2C/2T06A, OR2C/2T08A, OR2C/2T10A, OR2C/2T12A, and OR2C/2T15A/B 256-Pin PBGA Pinout (continued)

Pin	2C/2T06A Pad	2C/2T08A Pad	2C/2T10A Pad	2C/2T12A Pad	2C/2T15A/B Pad	Function
U8	VSS	VSS	VSS	VSS	VSS	VSS
U13	VSS	VSS	VSS	VSS	VSS	VSS
U17	VSS	VSS	VSS	VSS	VSS	VSS
B1	VDD	VDD	VDD	VDD	VDD	VDD
D6	VDD	VDD	VDD	VDD	VDD	VDD
D11	VDD	VDD	VDD	VDD	VDD	VDD
D15	VDD	VDD	VDD	VDD	VDD	VDD
F4	VDD	VDD	VDD	VDD	VDD	VDD
F17	VDD	VDD	VDD	VDD	VDD	VDD
K4	VDD	VDD	VDD	VDD	VDD	VDD
L17	VDD	VDD	VDD	VDD	VDD	VDD
R4	VDD	VDD	VDD	VDD	VDD	VDD
R17	VDD	VDD	VDD	VDD	VDD	VDD
U6	VDD	VDD	VDD	VDD	VDD	VDD
U10	VDD	VDD	VDD	VDD	VDD	VDD
U15	VDD	VDD	VDD	VDD	VDD	VDD
W3	—	—	—	—	—	No Connect
J10	VSS	VSS	VSS	VSS	VSS	VSS—ETC
J11	VSS	VSS	VSS	VSS	VSS	VSS—ETC
J12	VSS	VSS	VSS	VSS	VSS	VSS—ETC
J9	VSS	VSS	VSS	VSS	VSS	VSS—ETC
K10	VSS	VSS	VSS	VSS	VSS	VSS—ETC
K11	VSS	VSS	VSS	VSS	VSS	VSS—ETC
K12	VSS	VSS	VSS	VSS	VSS	VSS—ETC
K9	VSS	VSS	VSS	VSS	VSS	VSS—ETC
L10	VSS	VSS	VSS	VSS	VSS	VSS—ETC
L11	VSS	VSS	VSS	VSS	VSS	VSS—ETC
L12	VSS	VSS	VSS	VSS	VSS	VSS—ETC
L9	VSS	VSS	VSS	VSS	VSS	VSS—ETC
M10	VSS	VSS	VSS	VSS	VSS	VSS—ETC
M11	VSS	VSS	VSS	VSS	VSS	VSS—ETC
M12	VSS	VSS	VSS	VSS	VSS	VSS—ETC
M9	VSS	VSS	VSS	VSS	VSS	VSS—ETC

Notes:
The W3 pin on the 256-pin PBGA package is unconnected for all devices listed in this table.

The OR2C/2T08A do not have bond pads connected to the 256-pin PBGA package pins F2 and Y17.

The pins labeled I/O-VDD5 are user I/Os for the OR2CxxA and OR2TxxB series, but they are connected to VDD5 for the OR2TxxA series.

The pins labeled VSS-ETC are the 4 x 4 array of thermal balls located at the center of the package. The balls can be attached to the ground plane of the board for enhanced thermal capability (see Table 29), or they can be left unconnected.

Pin Information (continued)

Table 26. OR2C12A, OR2C15A, OR2C26A, and OR2C40A 304-Pin SQFP/SQFP2 Pinout

Pin	2C12A Pad	2C15A Pad	2C26A Pad	2C40A Pad	Function
1	VSS	VSS	VSS	VSS	VSS
2	VDD	VDD	VDD	VDD	VDD
3	VSS	VSS	VSS	VSS	VSS
4	PL1D	PL1D	PL1D	PL1D	I/O
5	PL1C	PL1C	PL1C	PL1A	I/O
6	PL1B	PL1B	PL1B	PL2D	I/O
7	PL1A	PL1A	PL1A	PL2A	I/O
8	PL2D	PL2D	PL2D	PL3D	I/O-A0
9	PL2C	PL2A	PL2A	PL3A	I/O
10	PL2B	PL3D	PL3D	PL4D	I/O
11	PL2A	PL3A	PL3A	PL4A	I/O
12	VSS	VSS	VSS	VSS	VSS
13	PL3D	PL4D	PL4D	PL5D	I/O
14	PL3A	PL4A	PL4A	PL6D	I/O
15	PL4D	PL5D	PL5D	PL7D	I/O
16	PL4A	PL5A	PL5A	PL8D	I/O-A1
17	PL5D	PL6D	PL6D	PL9D	I/O
18	PL5C	PL6C	PL6C	PL9C	I/O
19	PL5B	PL6B	PL6B	PL9B	I/O
20	PL5A	PL6A	PL6A	PL9A	I/O-A2
21	PL6D	PL7D	PL7D	PL10D	I/O
22	PL6C	PL7C	PL7C	PL10C	I/O
23	PL6B	PL7B	PL7B	PL10B	I/O
24	PL6A	PL7A	PL7A	PL10A	I/O-A3
25	VDD	VDD	VDD	VDD	VDD
26	PL7D	PL8D	PL8D	PL11D	I/O
27	PL7C	PL8C	PL8A	PL11A	I/O
28	PL7B	PL8B	PL9D	PL12D	I/O
29	PL7A	PL8A	PL9A	PL12A	I/O-A4
30	PL8D	PL9D	PL10D	PL13D	I/O-A5
31	PL8C	PL9C	PL10A	PL13A	I/O
32	PL8B	PL9B	PL11D	PL14D	I/O
33	PL8A	PL9A	PL11A	PL14A	I/O-A6
34	VSS	VSS	VSS	VSS	VSS
35	PL9D	PL10D	PL12D	PL15D	I/O
36	PL9C	PL10C	PL12C	PL15C	I/O
37	PL9B	PL10B	PL12B	PL15B	I/O
38	PL9A	PL10A	PL12A	PL15A	I/O-A7
39	VDD	VDD	VDD	VDD	VDD
40	PL10D	PL11D	PL13D	PL16D	I/O
41	PL10C	PL11C	PL13C	PL16C	I/O
42	PL10B	PL11B	PL13B	PL16B	I/O
43	PL10A	PL11A	PL13A	PL16A	I/O-A8
44	VSS	VSS	VSS	VSS	VSS

Note: The OR2TxxA and OR2TxxB series are not offered in the 304-pin SQFP/SQFP2 packages.

Pin Information (continued)

Table 26. OR2C12A, OR2C15A, OR2C26A, and OR2C40A 304-Pin SQFP/SQFP2 Pinout (continued)

Pin	2C12A Pad	2C15A Pad	2C26A Pad	2C40A Pad	Function
45	PL11D	PL12D	PL14D	PL17D	I/O-A9
46	PL11C	PL12C	PL14A	PL17A	I/O
47	PL11B	PL12B	PL15D	PL18D	I/O
48	PL11A	PL12A	PL15A	PL18A	I/O-A10
49	PL12D	PL13D	PL16D	PL19D	I/O
50	PL12C	PL13C	PL16A	PL19A	I/O
51	PL12B	PL13B	PL17D	PL20D	I/O
52	PL12A	PL13A	PL17A	PL20A	I/O-A11
53	VDD	VDD	VDD	VDD	VDD
54	PL13D	PL14D	PL18D	PL21D	I/O-A12
55	PL13B	PL14B	PL18B	PL21B	I/O
56	PL13A	PL14A	PL18A	PL21A	I/O
57	PL14D	PL15D	PL19D	PL22D	I/O
58	PL14B	PL15B	PL19B	PL22B	I/O-A13
59	PL14A	PL15A	PL19A	PL22A	I/O
60	PL15D	PL16D	PL20D	PL23D	I/O
61	PL15B	PL16B	PL20B	PL24D	I/O
62	PL15A	PL16A	PL20A	PL25D	I/O
63	PL16D	PL17D	PL21D	PL25A	I/O-A14
64	PL16A	PL17A	PL21A	PL26A	I/O
65	VSS	VSS	VSS	VSS	VSS
66	PL17D	PL18D	PL22D	PL27D	I/O
67	PL17C	PL18C	PL22C	PL27C	I/O
68	PL17B	PL18A	PL22A	PL27A	I/O
69	PL17A	PL19D	PL23D	PL28D	I/O
70	PL18D	PL19C	PL23C	PL28C	I/O
71	PL18C	PL19A	PL23A	PL28A	I/O
72	PL18B	PL20D	PL24D	PL29A	I/O
73	PL18A	PL20A	PL24A	PL30A	I/O-A15
74	VSS	VSS	VSS	VSS	VSS
75	CCLK	CCLK	CCLK	CCLK	CCLK
76	VDD	VDD	VDD	VDD	VDD
77	VSS	VSS	VSS	VSS	VSS
78	VDD	VDD	VDD	VDD	VDD
79	VSS	VSS	VSS	VSS	VSS
80	PB1A	PB1A	PB1A	PB1A	I/O-A16
81	PB1B	PB1C	PB1C	PB2A	I/O
82	PB1C	PB1D	PB1D	PB2D	I/O
83	PB1D	PB2A	PB2A	PB3A	I/O
84	PB2A	PB2D	PB2D	PB3D	I/O
85	PB2B	PB3A	PB3A	PB4A	I/O
86	PB2C	PB3C	PB3C	PB4C	I/O
87	PB2D	PB3D	PB3D	PB4D	I/O
88	VSS	VSS	VSS	VSS	VSS
89	PB3A	PB4A	PB4A	PB5A	I/O

Note: The OR2TxxA and OR2TxxB series are not offered in the 304-pin SQFP/SQFP2 packages.

Pin Information (continued)

Table 26. OR2C12A, OR2C15A, OR2C26A, and OR2C40A 304-Pin SQFP/SQFP2 Pinout (continued)

Pin	2C12A Pad	2C15A Pad	2C26A Pad	2C40A Pad	Function
90	PB3D	PB4D	PB4D	PB5D	I/O-A17
91	PB4A	PB5A	PB5A	PB6A	I/O
92	PB4D	PB5D	PB5D	PB6D	I/O
93	PB5A	PB6A	PB6A	PB7A	I/O
94	PB5B	PB6B	PB6B	PB7D	I/O
95	PB5C	PB6C	PB6C	PB8A	I/O
96	PB5D	PB6D	PB6D	PB8D	I/O
97	PB6A	PB7A	PB7A	PB9A	I/O
98	PB6B	PB7B	PB7B	PB9D	I/O
99	PB6C	PB7C	PB7C	PB10A	I/O
100	PB6D	PB7D	PB7D	PB10D	I/O
101	VDD	VDD	VDD	VDD	VDD
102	PB7A	PB8A	PB8A	PB11A	I/O
103	PB7B	PB8B	PB8D	PB11D	I/O
104	PB7C	PB8C	PB9A	PB12A	I/O
105	PB7D	PB8D	PB9D	PB12D	I/O
106	PB8A	PB9A	PB10A	PB13A	I/O
107	PB8B	PB9B	PB10D	PB13D	I/O
108	PB8C	PB9C	PB11A	PB14A	I/O
109	PB8D	PB9D	PB11D	PB14D	I/O
110	VSS	VSS	VSS	VSS	VSS
111	PB9A	PB10A	PB12A	PB15A	I/O
112	PB9B	PB10B	PB12B	PB15B	I/O
113	PB9C	PB10C	PB12C	PB15C	I/O
114	PB9D	PB10D	PB12D	PB15D	I/O
115	VSS	VSS	VSS	VSS	VSS
116	PB10A	PB11A	PB13A	PB16A	I/O
117	PB10B	PB11B	PB13B	PB16B	I/O
118	PB10C	PB11C	PB13C	PB16C	I/O
119	PB10D	PB11D	PB13D	PB16D	I/O
120	VSS	VSS	VSS	VSS	VSS
121	PB11A	PB12A	PB14A	PB17A	I/O
122	PB11B	PB12B	PB14D	PB17D	I/O
123	PB11C	PB12C	PB15A	PB18A	I/O
124	PB11D	PB12D	PB15D	PB18D	I/O
125	PB12A	PB13A	PB16A	PB19A	I/O-HDC
126	PB12B	PB13B	PB16D	PB19D	I/O
127	PB12C	PB13C	PB17A	PB20A	I/O
128	PB12D	PB13D	PB17D	PB20D	I/O
129	VDD	VDD	VDD	VDD	VDD
130	PB13A	PB14A	PB18A	PB21A	I/O-$\overline{\text{LDC}}$
131	PB13B	PB14B	PB18B	PB21D	I/O
132	PB13C	PB14C	PB18C	PB22A	I/O
133	PB13D	PB14D	PB18D	PB22D	I/O
134	PB14A	PB15A	PB19A	PB23A	I/O

Note: The OR2TxxA and OR2TxxB series are not offered in the 304-pin SQFP/SQFP2 packages.

Pin Information (continued)

Table 26. OR2C12A, OR2C15A, OR2C26A, and OR2C40A 304-Pin SQFP/SQFP2 Pinout (continued)

Pin	2C12A Pad	2C15A Pad	2C26A Pad	2C40A Pad	Function
135	PB14B	PB15B	PB19B	PB24A	I/O
136	PB14D	PB15D	PB19D	PB24D	I/O
137	PB15A	PB16A	PB20A	PB25A	I/O-$\overline{\text{INIT}}$
138	PB15D	PB16D	PB20D	PB25D	I/O
139	PB16A	PB17A	PB21A	PB26A	I/O
140	PB16D	PB17D	PB21D	PB26D	I/O
141	VSS	VSS	VSS	VSS	VSS
142	PB17A	PB18A	PB22A	PB27A	I/O
143	PB17B	PB18B	PB22B	PB27B	I/O
144	PB17C	PB18D	PB22D	PB27D	I/O
145	PB17D	PB19A	PB23A	PB28A	I/O
146	PB18A	PB19D	PB23D	PB28D	I/O
147	PB18B	PB20A	PB24A	PB29A	I/O
148	PB18C	PB20B	PB24B	PB29D	I/O
149	PB18D	PB20D	PB24D	PB30D	I/O
150	VSS	VSS	VSS	VSS	VSS
151	DONE	DONE	DONE	DONE	DONE
152	VDD	VDD	VDD	VDD	VDD
153	VSS	VSS	VSS	VSS	VSS
154	$\overline{\text{RESET}}$	$\overline{\text{RESET}}$	$\overline{\text{RESET}}$	$\overline{\text{RESET}}$	$\overline{\text{RESET}}$
155	$\overline{\text{PRGM}}$	$\overline{\text{PRGM}}$	$\overline{\text{PRGM}}$	$\overline{\text{PRGM}}$	$\overline{\text{PRGM}}$
156	PR18A	PR20A	PR24A	PR30A	I/O-M0
157	PR18B	PR20C	PR24C	PR29A	I/O
158	PR18C	PR20D	PR24D	PR29D	I/O
159	PR18D	PR19A	PR23A	PR28A	I/O
160	PR17A	PR19D	PR23D	PR28D	I/O
161	PR17B	PR18A	PR22A	PR27A	I/O
162	PR17C	PR18B	PR22B	PR27B	I/O
163	PR17D	PR18D	PR22D	PR27D	I/O
164	VSS	VSS	VSS	VSS	VSS
165	PR16A	PR17A	PR21A	PR26A	I/O
166	PR16D	PR17D	PR21D	PR25A	I/O
167	PR15A	PR16A	PR20A	PR24A	I/O
168	PR15C	PR16C	PR20C	PR24D	I/O
169	PR15D	PR16D	PR20D	PR23D	I/O-M1
170	PR14A	PR15A	PR19A	PR22A	I/O
171	PR14C	PR15C	PR19C	PR22C	I/O
172	PR14D	PR15D	PR19D	PR22D	I/O
173	PR13A	PR14A	PR18A	PR21A	I/O
174	PR13C	PR14C	PR18C	PR21C	I/O
175	PR13D	PR14D	PR18D	PR21D	I/O
176	VDD	VDD	VDD	VDD	VDD
177	PR12A	PR13A	PR17A	PR20A	I/O-M2
178	PR12B	PR13B	PR17D	PR20D	I/O
179	PR12C	PR13C	PR16A	PR19A	I/O

Note: The OR2TxxA and OR2TxxB series are not offered in the 304-pin SQFP/SQFP2 packages.

Pin Information (continued)

Table 26. OR2C12A, OR2C15A, OR2C26A, and OR2C40A 304-Pin SQFP/SQFP2 Pinout (continued)

Pin	2C12A Pad	2C15A Pad	2C26A Pad	2C40A Pad	Function
180	PR12D	PR13D	PR16D	PR19D	I/O
181	PR11A	PR12A	PR15A	PR18A	I/O-M3
182	PR11B	PR12B	PR15D	PR18D	I/O
183	PR11C	PR12C	PR14A	PR17A	I/O
184	PR11D	PR12D	PR14D	PR17D	I/O
185	VSS	VSS	VSS	VSS	VSS
186	PR10A	PR11A	PR13A	PR16A	I/O
187	PR10B	PR11B	PR13B	PR16B	I/O
188	PR10C	PR11C	PR13C	PR16C	I/O
189	PR10D	PR11D	PR13D	PR16D	I/O
190	VDD	VDD	VDD	VDD	VDD
191	PR9A	PR10A	PR12A	PR15A	I/O
192	PR9B	PR10B	PR12B	PR15B	I/O
193	PR9C	PR10C	PR12C	PR15C	I/O
194	PR9D	PR10D	PR12D	PR15D	I/O
195	VSS	VSS	VSS	VSS	VSS
196	PR8A	PR9A	PR11A	PR14A	I/O
197	PR8B	PR9B	PR11D	PR14D	I/O
198	PR8C	PR9C	PR10A	PR13A	I/O
199	PR8D	PR9D	PR10D	PR13D	I/O
200	PR7A	PR8A	PR9A	PR12A	I/O-CS1
201	PR7B	PR8B	PR9D	PR12D	I/O
202	PR7C	PR8C	PR8A	PR11A	I/O
203	PR7D	PR8D	PR8D	PR11D	I/O
204	VDD	VDD	VDD	VDD	VDD
205	PR6A	PR7A	PR7A	PR10A	I/O-$\overline{CS0}$
206	PR6B	PR7B	PR7B	PR10B	I/O
207	PR6C	PR7C	PR7C	PR10C	I/O
208	PR6D	PR7D	PR7D	PR10D	I/O
209	PR5A	PR6A	PR6A	PR9A	I/O
210	PR5B	PR6B	PR6B	PR9B	I/O
211	PR5C	PR6C	PR6C	PR9C	I/O
212	PR5D	PR6D	PR6D	PR9D	I/O
213	PR4A	PR5A	PR5A	PR8A	I/O-$\overline{RD}$
214	PR4B	PR5B	PR5B	PR7A	I/O
215	PR4D	PR5D	PR5D	PR6A	I/O
216	PR3A	PR4A	PR4A	PR5A	I/O
217	VSS	VSS	VSS	VSS	VSS
218	PR2A	PR3A	PR3A	PR4A	I/O-$\overline{WR}$
219	PR2B	PR3B	PR3B	PR4B	I/O
220	PR2C	PR2A	PR2A	PR3A	I/O
221	PR2D	PR2D	PR2D	PR3D	I/O
222	PR1A	PR1A	PR1A	PR2A	I/O
223	PR1B	PR1B	PR1B	PR2D	I/O
224	PR1C	PR1C	PR1C	PR1A	I/O

Note: The OR2TxxA and OR2TxxB series are not offered in the 304-pin SQFP/SQFP2 packages.

Pin Information (continued)

Table 26. OR2C12A, OR2C15A, OR2C26A, and OR2C40A 304-Pin SQFP/SQFP2 Pinout (continued)

Pin	2C12A Pad	2C15A Pad	2C26A Pad	2C40A Pad	Function
225	PR1D	PR1D	PR1D	PR1D	I/O
226	VSS	VSS	VSS	VSS	VSS
227	RD_CFGN	RD_CFGN	RD_CFGN	RD_CFGN	RD_CFGN
228	VDD	VDD	VDD	VDD	VDD
229	VSS	VSS	VSS	VSS	VSS
230	VDD	VDD	VDD	VDD	VDD
231	VSS	VSS	VSS	VSS	VSS
232	PT18D	PT20D	PT24D	PT30D	I/O
233	PT18C	PT20C	PT24C	PT30A	I/O
234	PT18B	PT20A	PT24A	PT29A	I/O
235	PT18A	PT19D	PT23D	PT28D	I/O
236	PT17D	PT19A	PT23A	PT28A	I/O-RDY/RCLK
237	PT17C	PT18D	PT22D	PT27D	I/O
238	PT17B	PT18C	PT22C	PT27C	I/O
239	PT17A	PT18A	PT22A	PT27A	I/O
240	VSS	VSS	VSS	VSS	VSS
241	PT16D	PT17D	PT21D	PT26D	I/O
242	PT16C	PT17C	PT21C	PT26C	I/O
243	PT16A	PT17A	PT21A	PT26A	I/O
244	PT15D	PT16D	PT20D	PT25D	I/O-D7
245	PT15A	PT16A	PT20A	PT25A	I/O
246	PT14D	PT15D	PT19D	PT24D	I/O
247	PT14A	PT15A	PT19A	PT23D	I/O
248	PT13D	PT14D	PT18D	PT22D	I/O
249	PT13C	PT14C	PT18C	PT22A	I/O
250	PT13B	PT14B	PT18B	PT21D	I/O-D6
251	PT13A	PT14A	PT18A	PT21A	I/O
252	VDD	VDD	VDD	VDD	VDD
253	PT12D	PT13D	PT17D	PT20D	I/O
254	PT12C	PT13C	PT17A	PT20A	I/O
255	PT12B	PT13B	PT16D	PT19D	I/O
256	PT12A	PT13A	PT16A	PT19A	I/O-D5
257	PT11D	PT12D	PT15D	PT18D	I/O
258	PT11C	PT12C	PT15A	PT18A	I/O
259	PT11B	PT12B	PT14D	PT17D	I/O
260	PT11A	PT12A	PT14A	PT17A	I/O-D4
261	VSS	VSS	VSS	VSS	VSS
262	PT10D	PT11D	PT13D	PT16D	I/O
263	PT10C	PT11C	PT13C	PT16C	I/O
264	PT10B	PT11B	PT13B	PT16B	I/O
265	PT10A	PT11A	PT13A	PT16A	I/O-D3
266	VSS	VSS	VSS	VSS	VSS
267	PT9D	PT10D	PT12D	PT15D	I/O
268	PT9C	PT10C	PT12C	PT15C	I/O
269	PT9B	PT10B	PT12B	PT15B	I/O

Note: The OR2TxxA and OR2TxxB series are not offered in the 304-pin SQFP/SQFP2 packages.

Pin Information (continued)

Table 26. OR2C12A, OR2C15A, OR2C26A, and OR2C40A 304-Pin SQFP/SQFP2 Pinout (continued)

Pin	2C12A Pad	2C15A Pad	2C26A Pad	2C40A Pad	Function
270	PT9A	PT10A	PT12A	PT15A	I/O-D2
271	VSS	VSS	VSS	VSS	VSS
272	PT8D	PT9D	PT11D	PT14D	I/O-D1
273	PT8C	PT9C	PT11A	PT14A	I/O
274	PT8B	PT9B	PT10D	PT13D	I/O
275	PT8A	PT9A	PT10A	PT13A	I/O-D0/DIN
276	PT7D	PT8D	PT9D	PT12D	I/O
277	PT7C	PT8C	PT9A	PT12A	I/O
278	PT7B	PT8B	PT8D	PT11D	I/O
279	PT7A	PT8A	PT8A	PT11A	I/O-DOUT
280	VDD	VDD	VDD	VDD	VDD
281	PT6D	PT7D	PT7D	PT10D	I/O
282	PT6C	PT7C	PT7C	PT10A	I/O
283	PT6B	PT7B	PT7B	PT9D	I/O
284	PT6A	PT7A	PT7A	PT9A	I/O
285	PT5D	PT6D	PT6D	PT8D	I/O
286	PT5C	PT6C	PT6C	PT8A	I/O
287	PT5B	PT6B	PT6B	PT7D	I/O
288	PT5A	PT6A	PT6A	PT7A	I/O-TDI
289	PT4D	PT5D	PT5D	PT6D	I/O
290	PT4A	PT5A	PT5A	PT6A	I/O
291	PT3D	PT4D	PT4D	PT5D	I/O
292	PT3A	PT4A	PT4A	PT5A	I/O-TMS
293	VSS	VSS	VSS	VSS	VSS
294	PT2D	PT3D	PT3D	PT4D	I/O
295	PT2C	PT3A	PT3A	PT4A	I/O
296	PT2B	PT2D	PT2D	PT3D	I/O
297	PT2A	PT2A	PT2A	PT3A	I/O
298	PT1D	PT1D	PT1D	PT2D	I/O
299	PT1C	PT1C	PT1C	PT2A	I/O
300	PT1B	PT1B	PT1B	PT1D	I/O
301	PT1A	PT1A	PT1A	PT1A	I/O-TCK
302	VSS	VSS	VSS	VSS	VSS
303	RD_DATA/TDO	RD_DATA/TDO	RD_DATA/TDO	RD_DATA/TDO	RD_DATA/TDO
304	VDD	VDD	VDD	VDD	VDD

Note: The OR2TxxA and OR2TxxB series are not offered in the 304-pin SQFP/SQFP2 packages.

Pin Information (continued)

Table 27. OR2C/2T10A, OR2C/2T12A, OR2C/2T15A/B, OR2C/2T26A, and OR2T40A/B 352-Pin PBGA Pinout

Pin	2C/2T10A Pad	2C/2T12A Pad	2C/2T15A/B Pad	2C/2T26A Pad	OR2T40A/B Pad	Function
B1	PL1D	PL1D	PL1D	PL1D	PL1D	I/O
C2	PL1C	PL1C	PL1C	PL1C	PL1A	I/O
C1	PL1B	PL1B	PL1B	PL1B	PL2D	I/O
D2	PL1A	PL1A	PL1A	PL1A	PL2A	I/O
D3	PL2D	PL2D	PL2D	PL2D	PL3D	I/O-A0
D1	PL2C	PL2C	PL2A	PL2A	PL3A	I/O
E2	PL2B	PL2B	PL3D	PL3D	PL4D	I/O
E4	—	—	PL3B	PL3B	PL4B	I/O
E3	PL2A	PL2A	PL3A	PL3A	PL4A	I/O
E1	PL3D	PL3D	PL4D	PL4D	$V_{DD}5$	I/O-$V_{DD}5$
F2	—	PL3C	PL4C	PL4C	PL5C	I/O
G4	PL3C	PL3B	PL4B	PL4B	PL5B	I/O
F3	—	PL3A	PL4A	PL4A	PL6D	I/O
F1	PL3B	PL4D	PL5D	PL5D	PL7D	I/O
G2	—	PL4C	PL5C	PL5C	PL7C	I/O
G1	—	PL4B	PL5B	PL5B	PL7B	I/O
G3	PL3A	PL4A	PL5A	PL5A	PL8D	I/O-A1
H2	PL4D	PL5D	PL6D	PL6D	PL9D	I/O
J4	PL4C	PL5C	PL6C	PL6C	PL9C	I/O
H1	PL4B	PL5B	PL6B	PL6B	PL9B	I/O
H3	PL4A	PL5A	PL6A	PL6A	PL9A	I/O-A2
J2	PL5D	PL6D	PL7D	PL7D	PL10D	I/O
J1	PL5C	PL6C	PL7C	PL7C	PL10C	I/O
K2	PL5B	PL6B	PL7B	PL7B	PL10B	I/O
J3	PL5A	PL6A	PL7A	PL7A	PL10A	I/O-A3
K1	PL6D	PL7D	PL8D	PL8D	PL11D	I/O
K4	PL6C	PL7C	PL8C	PL8A	PL11A	I/O
L2	PL6B	PL7B	PL8B	PL9D	PL12D	I/O
K3	PL6A	PL7A	PL8A	PL9A	PL12A	I/O-A4
L1	PL7D	PL8D	PL9D	PL10D	PL13D	I/O-A5
M2	PL7C	PL8C	PL9C	PL10A	PL13A	I/O
M1	PL7B	PL8B	PL9B	PL11D	PL14D	I/O
L3	PL7A	PL8A	PL9A	PL11A	PL14A	I/O-A6
N2	PL8D	PL9D	PL10D	PL12D	PL15D	I/O
M4	PL8C	PL9C	PL10C	PL12C	PL15C	I/O
N1	PL8B	PL9B	PL10B	PL12B	PL15B	I/O
M3	PL8A	PL9A	PL10A	PL12A	PL15A	I/O-A7
P2	PL9D	PL10D	PL11D	PL13D	PL16D	I/O

Notes:
The pins labeled I/O-$V_{DD}5$ are user I/Os for the OR2CxxA and OR2TxxB series, but they are connected to $V_{DD}5$ for the OR2TxxA series.

The pins labeled V_{SS}-ETC are the 6 x 6 array of thermal balls located at the center of the package. The balls can be attached to the ground plane of the board for enhanced thermal capability (see Table 29), or they can be left unconnected.

Pin Information (continued)

Table 27. OR2C/2T10A, OR2C/2T12A, OR2C/2T15A/B, OR2C/2T26A, and OR2T40A/B 352-Pin PBGA Pinout (continued)

Pin	2C/2T10A Pad	2C/2T12A Pad	2C/2T15A/B Pad	2C/2T26A Pad	OR2T40A/B Pad	Function
P4	PL9C	PL10C	PL11C	PL13C	VDD5	I/O-VDD5
P1	PL9B	PL10B	PL11B	PL13B	PL16B	I/O
N3	PL9A	PL10A	PL11A	PL13A	PL16A	I/O-A8
R2	PL10D	PL11D	PL12D	PL14D	PL17D	I/O-A9
P3	PL10C	PL11C	PL12C	PL14A	PL17A	I/O
R1	PL10B	PL11B	PL12B	PL15D	PL18D	I/O
T2	PL10A	PL11A	PL12A	PL15A	PL18A	I/O-A10
R3	PL11D	PL12D	PL13D	PL16D	PL19D	I/O
T1	PL11C	PL12C	PL13C	PL16A	PL19A	I/O
R4	PL11B	PL12B	PL13B	PL17D	PL20D	I/O
U2	PL11A	PL12A	PL13A	PL17A	PL20A	I/O-A11
T3	PL12D	PL13D	PL14D	PL18D	PL21D	I/O-A12
U1	—	PL13C	PL14C	PL18C	PL21C	I/O
U4	PL12C	PL13B	PL14B	PL18B	PL21B	I/O
V2	—	PL13A	PL14A	PL18A	PL21A	I/O
U3	PL12B	PL14D	PL15D	PL19D	PL22D	I/O
V1	PL12A	PL14C	PL15C	PL19C	PL22C	I/O
W2	PL13D	PL14B	PL15B	PL19B	PL22B	I/O-A13
W1	PL13C	PL14A	PL15A	PL19A	PL22A	I/O
V3	PL13B	PL15D	PL16D	PL20D	PL23D	I/O
Y2	PL13A	PL15C	PL16C	PL20C	PL23C	I/O
W4	PL14D	PL15B	PL16B	PL20B	PL24D	I/O
Y1	—	PL15A	PL16A	PL20A	PL25D	I/O
W3	PL14C	PL16D	PL17D	PL21D	PL25A	I/O-A14
AA2	PL14B	PL16C	PL17C	PL21C	PL26C	I/O
Y4	PL14A	PL16B	PL17B	PL21B	PL26B	I/O
AA1	—	PL16A	PL17A	PL21A	PL26A	I/O
Y3	PL15D	PL17D	PL18D	PL22D	VDD5	I/O-VDD5
AB2	PL15C	PL17C	PL18C	PL22C	PL27C	I/O
AB1	PL15B	PL17B	PL18A	PL22A	PL27A	I/O
AA3	PL15A	PL17A	PL19D	PL23D	PL28D	I/O
AC2	PL16D	PL18D	PL19C	PL23C	PL28C	I/O
AB4	PL16C	PL18C	PL19A	PL23A	PL28A	I/O
AC1	PL16B	PL18B	PL20D	PL24D	PL29A	I/O
AB3	—	—	PL20C	PL24C	PL30C	I/O
AD2	—	—	PL20B	PL24B	PL30B	I/O
AC3	PL16A	PL18A	PL20A	PL24A	PL30A	I/O-A15
AD1	CCLK	CCLK	CCLK	CCLK	PCCLK	CCLK
AF2	PB1A	PB1A	PB1A	PB1A	PB1A	I/O-A16

Notes:
The pins labeled I/O-VDD5 are user I/Os for the OR2CxxA and OR2TxxB series, but they are connected to VDD5 for the OR2TxxA series.

The pins labeled VSS-ETC are the 6 x 6 array of thermal balls located at the center of the package. The balls can be attached to the ground plane of the board for enhanced thermal capability (see Table 29), or they can be left unconnected.

Pin Information (continued)

Table 27. OR2C/2T10A, OR2C/2T12A, OR2C/2T15A/B, OR2C/2T26A, and OR2T40A/B 352-Pin PBGA Pinout (continued)

Pin	2C/2T10A Pad	2C/2T12A Pad	2C/2T15A/B Pad	2C/2T26A Pad	OR2T40A/B Pad	Function
AE3	—	—	PB1B	PB1B	PB1B	I/O
AF3	PB1B	PB1B	PB1C	PB1C	PB2A	I/O
AE4	PB1C	PB1C	PB1D	PB1D	PB2D	I/O
AD4	PB1D	PB1D	PB2A	PB2A	PB3A	I/O
AF4	PB2A	PB2A	PB2D	PB2D	$V_{DD}5$	I/O-$V_{DD}5$
AE5	—	PB2B	PB3A	PB3A	PB4A	I/O
AC5	PB2B	PB2C	PB3C	PB3C	PB4C	I/O
AD5	—	PB2D	PB3D	PB3D	PB4D	I/O
AF5	PB2C	PB3A	PB4A	PB4A	PB5A	I/O
AE6	PB2D	PB3B	PB4B	PB4B	PB5B	I/O
AC7	PB3A	PB3C	PB4C	PB4C	PB5C	I/O
AD6	PB3B	PB3D	PB4D	PB4D	PB5D	I/O-A17
AF6	—	PB4A	PB5A	PB5A	PB6A	I/O
AE7	PB3C	PB4B	PB5B	PB5B	PB6B	I/O
AF7	—	PB4C	PB5C	PB5C	PB6C	I/O
AD7	PB3D	PB4D	PB5D	PB5D	PB6D	I/O
AE8	PB4A	PB5A	PB6A	PB6A	PB7A	I/O
AC9	PB4B	PB5B	PB6B	PB6B	PB7D	I/O
AF8	PB4C	PB5C	PB6C	PB6C	PB8A	I/O
AD8	PB4D	PB5D	PB6D	PB6D	PB8D	I/O
AE9	PB5A	PB6A	PB7A	PB7A	PB9A	I/O
AF9	PB5B	PB6B	PB7B	PB7B	PB9D	I/O
AE10	PB5C	PB6C	PB7C	PB7C	PB10A	I/O
AD9	PB5D	PB6D	PB7D	PB7D	PB10D	I/O
AF10	PB6A	PB7A	PB8A	PB8A	PB11A	I/O
AC10	PB6B	PB7B	PB8B	PB8D	PB11D	I/O
AE11	PB6C	PB7C	PB8C	PB9A	PB12A	I/O
AD10	PB6D	PB7D	PB8D	PB9D	PB12D	I/O
AF11	PB7A	PB8A	PB9A	PB10A	PB13A	I/O
AE12	PB7B	PB8B	PB9B	PB10D	PB13D	I/O
AF12	PB7C	PB8C	PB9C	PB11A	PB14A	I/O
AD11	PB7D	PB8D	PB9D	PB11D	PB14D	I/O
AE13	PB8A	PB9A	PB10A	PB12A	PB15A	I/O
AC12	PB8B	PB9B	PB10B	PB12B	PB15B	I/O
AF13	PB8C	PB9C	PB10C	PB12C	PB15C	I/O
AD12	PB8D	PB9D	PB10D	PB12D	PB15D	I/O
AE14	PB9A	PB10A	PB11A	PB13A	PB16A	I/O
AC14	PB9B	PB10B	PB11B	PB13B	PB16B	I/O
AF14	PB9C	PB10C	PB11C	PB13C	PB16C	I/O

Notes:
The pins labeled I/O-$V_{DD}5$ are user I/Os for the OR2CxxA and OR2TxxB series, but they are connected to $V_{DD}5$ for the OR2TxxA series.

The pins labeled V_{SS}-ETC are the 6 x 6 array of thermal balls located at the center of the package. The balls can be attached to the ground plane of the board for enhanced thermal capability (see Table 29), or they can be left unconnected.

Pin Information (continued)

Table 27. OR2C/2T10A, OR2C/2T12A, OR2C/2T15A/B, OR2C/2T26A, and OR2T40A/B 352-Pin PBGA Pinout (continued)

Pin	2C/2T10A Pad	2C/2T12A Pad	2C/2T15A/B Pad	2C/2T26A Pad	OR2T40A/B Pad	Function
AD13	PB9D	PB10D	PB11D	PB13D	PB16D	I/O
AE15	PB10A	PB11A	PB12A	PB14A	VDD5	I/O-VDD5
AD14	PB10B	PB11B	PB12B	PB14D	PB17D	I/O
AF15	PB10C	PB11C	PB12C	PB15A	PB18A	I/O
AE16	PB10D	PB11D	PB12D	PB15D	PB18D	I/O
AD15	PB11A	PB12A	PB13A	PB16A	PB19A	I/O-HDC
AF16	PB11B	PB12B	PB13B	PB16D	PB19D	I/O
AC15	PB11C	PB12C	PB13C	PB17A	PB20A	I/O
AE17	PB11D	PB12D	PB13D	PB17D	PB20D	I/O
AD16	PB12A	PB13A	PB14A	PB18A	PB21A	I/O-$\overline{\text{LDC}}$
AF17	PB12B	PB13B	PB14B	PB18B	PB21D	I/O
AC17	PB12C	PB13C	PB14C	PB18C	PB22A	I/O
AE18	PB12D	PB13D	PB14D	PB18D	PB22D	I/O
AD17	PB13A	PB14A	PB15A	PB19A	PB23A	I/O
AF18	PB13B	PB14B	PB15B	PB19B	PB24A	I/O
AE19	—	PB14C	PB15C	PB19C	PB24C	I/O
AF19	PB13C	PB14D	PB15D	PB19D	PB24D	I/O
AD18	PB13D	PB15A	PB16A	PB20A	PB25A	I/O-$\overline{\text{INIT}}$
AE20	—	PB15B	PB16B	PB20B	PB25B	I/O
AC19	PB14A	PB15C	PB16C	PB20C	PB25C	I/O
AF20	—	PB15D	PB16D	PB20D	PB25D	I/O
AD19	PB14B	PB16A	PB17A	PB21A	VDD5	I/O-VDD5
AE21	PB14C	PB16B	PB17B	PB21B	PB26B	I/O
AC20	PB14D	PB16C	PB17C	PB21C	PB26C	I/O
AF21	PB15A	PB16D	PB17D	PB21D	PB26D	I/O
AD20	PB15B	PB17A	PB18A	PB22A	PB27A	I/O
AE22	PB15C	PB17B	PB18B	PB22B	PB27B	I/O
AF22	PB15D	PB17C	PB18D	PB22D	PB27D	I/O
AD21	PB16A	PB17D	PB19A	PB23A	PB28A	I/O
AE23	—	—	PB19C	PB23B	PB28B	I/O
AC22	PB16B	PB18A	PB19D	PB23D	PB28D	I/O
AF23	PB16C	PB18B	PB20A	PB24A	PB29A	I/O
AD22	PB16D	PB18C	PB20B	PB24B	PB29D	I/O
AE24	—	—	PB20C	PB24C	PB30C	I/O
AD23	—	PB18D	PB20D	PB24D	PB30D	I/O
AF24	DONE	DONE	DONE	DONE	PDONE	DONE
AE26	$\overline{\text{RESET}}$	$\overline{\text{RESET}}$	$\overline{\text{RESET}}$	$\overline{\text{RESET}}$	PRESETN	$\overline{\text{RESET}}$
AD25	$\overline{\text{PRGM}}$	PRGM	$\overline{\text{PRGM}}$	PRGM	PPRGMN	$\overline{\text{PRGM}}$
AD26	PR16A	PR18A	PR20A	PR24A	PR30A	I/O-M0

Notes:
The pins labeled I/O-VDD5 are user I/Os for the OR2CxxA and OR2TxxB series, but they are connected to VDD5 for the OR2TxxA series.

The pins labeled VSS-ETC are the 6 x 6 array of thermal balls located at the center of the package. The balls can be attached to the ground plane of the board for enhanced thermal capability (see Table 29), or they can be left unconnected.

Pin Information (continued)

Table 27. OR2C/2T10A, OR2C/2T12A, OR2C/2T15A/B, OR2C/2T26A, and OR2T40A/B 352-Pin PBGA Pinout (continued)

Pin	2C/2T10A Pad	2C/2T12A Pad	2C/2T15A/B Pad	2C/2T26A Pad	OR2T40A/B Pad	Function
AC25	PR16B	PR18B	PR20C	PR24C	PR29A	I/O
AC24	PR16C	PR18C	PR20D	PR24D	PR29D	I/O
AC26	PR16D	PR18D	PR19A	PR23A	PR28A	I/O
AB25	PR15A	PR17A	PR19D	PR23D	PR28D	I/O
AB23	PR15B	PR17B	PR18A	PR22A	PR27A	I/O
AB24	PR15C	PR17C	PR18B	PR22B	PR27B	I/O
AB26	PR15D	PR17D	PR18D	PR22D	PR27D	I/O
AA25	PR14A	PR16A	PR17A	PR21A	PR26A	I/O
Y23	PR14B	PR16B	PR17B	PR21B	PR26B	I/O
AA24	PR14C	PR16C	PR17C	PR21C	PR26C	I/O
AA26	—	PR16D	PR17D	PR21D	PR25A	I/O
Y25	PR14D	PR15A	PR16A	PR20A	PR24A	I/O
Y26	—	PR15B	PR16B	PR20B	PR24B	I/O
Y24	PR13A	PR15C	PR16C	PR20C	PR24D	I/O
W25	PR13B	PR15D	PR16D	PR20D	PR23D	I/O-M1
V23	PR13C	PR14A	PR15A	PR19A	PR22A	I/O
W26	—	PR14B	PR15B	PR19B	PR22B	I/O
W24	PR13D	PR14C	PR15C	PR19C	PR22C	I/O
V25	PR12A	PR14D	PR15D	PR19D	$V_{DD}5$	I/O-$V_{DD}5$
V26	PR12B	PR13A	PR14A	PR18A	PR21A	I/O
U25	—	PR13B	PR14B	PR18B	PR21B	I/O
V24	PR12C	PR13C	PR14C	PR18C	PR21C	I/O
U26	PR12D	PR13D	PR14D	PR18D	PR21D	I/O
U23	PR11A	PR12A	PR13A	PR17A	PR20A	I/O-M2
T25	PR11B	PR12B	PR13B	PR17D	PR20D	I/O
U24	PR11C	PR12C	PR13C	PR16A	PR19A	I/O
T26	PR11D	PR12D	PR13D	PR16D	PR19D	I/O
R25	PR10A	PR11A	PR12A	PR15A	PR18A	I/O-M3
R26	PR10B	PR11B	PR12B	PR15D	PR18D	I/O
T24	PR10C	PR11C	PR12C	PR14A	PR17A	I/O
P25	PR10D	PR11D	PR12D	PR14D	PR17D	I/O
R23	PR9A	PR10A	PR11A	PR13A	PR16A	I/O
P26	PR9B	PR10B	PR11B	PR13B	PR16B	I/O
R24	PR9C	PR10C	PR11C	PR13C	PR16C	I/O
N25	PR9D	PR10D	PR11D	PR13D	PR16D	I/O
N23	PR8A	PR9A	PR10A	PR12A	PR15A	I/O
N26	PR8B	PR9B	PR10B	PR12B	PR15B	I/O
P24	PR8C	PR9C	PR10C	PR12C	PR15C	I/O
M25	PR8D	PR9D	PR10D	PR12D	PR15D	I/O

Notes:
The pins labeled I/O-$V_{DD}5$ are user I/Os for the OR2CxxA and OR2TxxB series, but they are connected to $V_{DD}5$ for the OR2TxxA series.

The pins labeled V_{SS}-ETC are the 6 x 6 array of thermal balls located at the center of the package. The balls can be attached to the ground plane of the board for enhanced thermal capability (see Table 29), or they can be left unconnected.

Pin Information (continued)

Table 27. OR2C/2T10A, OR2C/2T12A, OR2C/2T15A/B, OR2C/2T26A, and OR2T40A/B 352-Pin PBGA Pinout (continued)

Pin	2C/2T10A Pad	2C/2T12A Pad	2C/2T15A/B Pad	2C/2T26A Pad	OR2T40A/B Pad	Function
N24	PR7A	PR8A	PR9A	PR11A	$V_{DD}5$	I/O-$V_{DD}5$
M26	PR7B	PR8B	PR9B	PR11D	PR14D	I/O
L25	PR7C	PR8C	PR9C	PR10A	PR13A	I/O
M24	PR7D	PR8D	PR9D	PR10D	PR13D	I/O
L26	PR6A	PR7A	PR8A	PR9A	PR12A	I/O-CS1
M23	PR6B	PR7B	PR8B	PR9D	PR12D	I/O
K25	PR6C	PR7C	PR8C	PR8A	PR11A	I/O
L24	PR6D	PR7D	PR8D	PR8D	PR11D	I/O
K26	PR5A	PR6A	PR7A	PR7A	PR10A	I/O-$\overline{CS0}$
K23	PR5B	PR6B	PR7B	PR7B	PR10B	I/O
J25	PR5C	PR6C	PR7C	PR7C	PR10C	I/O
K24	PR5D	PR6D	PR7D	PR7D	PR10D	I/O
J26	PR4A	PR5A	PR6A	PR6A	PR9A	I/O
H25	PR4B	PR5B	PR6B	PR6B	PR9B	I/O
H26	PR4C	PR5C	PR6C	PR6C	PR9C	I/O
J24	PR4D	PR5D	PR6D	PR6D	PR9D	I/O
G25	PR3A	PR4A	PR5A	PR5A	PR8A	I/O-$\overline{RD}$
H23	PR3B	PR4B	PR5B	PR5B	PR7A	I/O
G26	—	PR4C	PR5C	PR5C	PR7C	I/O
H24	PR3C	PR4D	PR5D	PR5D	PR6A	I/O
F25	PR3D	PR3A	PR4A	PR4A	$V_{DD}5$	I/O-$V_{DD}5$
G23	—	PR3B	PR4B	PR4B	PR5B	I/O
F26	—	PR3C	PR4C	PR4C	PR5C	I/O
G24	—	PR3D	PR4D	PR4D	PR5D	I/O
E25	PR2A	PR2A	PR3A	PR3A	PR4A	I/O-$\overline{WR}$
E26	PR2B	PR2B	PR3B	PR3B	PR4B	I/O
F24	—	—	PR3D	PR3D	PR4D	I/O
D25	PR2C	PR2C	PR2A	PR2A	PR3A	I/O
E23	PR2D	PR2D	PR2D	PR2D	PR3D	I/O
D26	PR1A	PR1A	PR1A	PR1A	PR2A	I/O
E24	PR1B	PR1B	PR1B	PR1B	PR2D	I/O
C25	PR1C	PR1C	PR1C	PR1C	PR1A	I/O
D24	PR1D	PR1D	PR1D	PR1D	PR1D	I/O
C26	$\overline{RD\_CFGN}$	$\overline{RD\_CFGN}$	$\overline{RD\_CFGN}$	$\overline{RD\_CFGN}$	$\overline{RD\_CFGN}$	$\overline{RD\_CFGN}$
A25	PT16D	PT18D	PT20D	PT24D	PT30D	I/O
B24	PT16C	PT18C	PT20C	PT24C	PT30A	I/O
A24	—	—	PT20B	PT24B	PT29B	I/O
B23	PT16B	PT18B	PT20A	PT24A	PT29A	I/O
C23	PT16A	PT18A	PT19D	PT23D	PT28D	I/O

Notes:
The pins labeled I/O-$V_{DD}5$ are user I/Os for the OR2CxxA and OR2TxxB series, but they are connected to $V_{DD}5$ for the OR2TxxA series.

The pins labeled V_{SS}-ETC are the 6 x 6 array of thermal balls located at the center of the package. The balls can be attached to the ground plane of the board for enhanced thermal capability (see Table 29), or they can be left unconnected.

Pin Information (continued)

Table 27. OR2C/2T10A, OR2C/2T12A, OR2C/2T15A/B, OR2C/2T26A, and OR2T40A/B 352-Pin PBGA Pinout (continued)

Pin	2C/2T10A Pad	2C/2T12A Pad	2C/2T15A/B Pad	2C/2T26A Pad	OR2T40A/B Pad	Function
A23	PT15D	PT17D	PT19A	PT23A	PT28A	I/O-RDY/ RCLK
B22	PT15C	PT17C	PT18D	PT22D	PT27D	I/O
D22	PT15B	PT17B	PT18C	PT22C	PT27C	I/O
C22	PT15A	PT17A	PT18A	PT22A	PT27A	I/O
A22	PT14D	PT16D	PT17D	PT21D	PT26D	I/O
B21	PT14C	PT16C	PT17C	PT21C	PT26C	I/O
D20	PT14B	PT16B	PT17B	PT21B	PT26B	I/O
C21	PT14A	PT16A	PT17A	PT21A	PT26A	I/O
A21	PT13D	PT15D	PT16D	PT20D	PT25D	I/O-D7
B20	—	PT15C	PT16C	PT20C	PT25C	I/O
A20	PT13C	PT15B	PT16B	PT20B	PT25B	I/O
C20	—	PT15A	PT16A	PT20A	PT25A	I/O
B19	PT13B	PT14D	PT15D	PT19D	VDD5	I/O-VDD5
D18	—	PT14C	PT15C	PT19C	PT24C	I/O
A19	PT13A	PT14B	PT15B	PT19B	PT24B	I/O
C19	—	PT14A	PT15A	PT19A	PT23D	I/O
B18	PT12D	PT13D	PT14D	PT18D	PT22D	I/O
A18	PT12C	PT13C	PT14C	PT18C	PT22A	I/O
B17	PT12B	PT13B	PT14B	PT18B	PT21D	I/O-D6
C18	PT12A	PT13A	PT14A	PT18A	PT21A	I/O
A17	PT11D	PT12D	PT13D	PT17D	PT20D	I/O
D17	PT11C	PT12C	PT13C	PT17A	PT20A	I/O
B16	PT11B	PT12B	PT13B	PT16D	PT19D	I/O
C17	PT11A	PT12A	PT13A	PT16A	PT19A	I/O-D5
A16	PT10D	PT11D	PT12D	PT15D	PT18D	I/O
B15	PT10C	PT11C	PT12C	PT15A	PT18A	I/O
A15	PT10B	PT11B	PT12B	PT14D	PT17D	I/O
C16	PT10A	PT11A	PT12A	PT14A	PT17A	I/O-D4
B14	PT9D	PT10D	PT11D	PT13D	PT16D	I/O
D15	PT9C	PT10C	PT11C	PT13C	PT16C	I/O
A14	PT9B	PT10B	PT11B	PT13B	PT16B	I/O
C15	PT9A	PT10A	PT11A	PT13A	PT16A	I/O-D3
B13	PT8D	PT9D	PT10D	PT12D	PT15D	I/O
D13	PT8C	PT9C	PT10C	PT12C	PT15C	I/O
A13	PT8B	PT9B	PT10B	PT12B	VDD5	I/O-VDD5
C14	PT8A	PT9A	PT10A	PT12A	PT15A	I/O-D2
B12	PT7D	PT8D	PT9D	PT11D	PT14D	I/O-D1
C13	PT7C	PT8C	PT9C	PT11A	PT14A	I/O

Notes:
The pins labeled I/O-VDD5 are user I/Os for the OR2CxxA and OR2TxxB series, but they are connected to VDD5 for the OR2TxxA series.

The pins labeled VSS-ETC are the 6 x 6 array of thermal balls located at the center of the package. The balls can be attached to the ground plane of the board for enhanced thermal capability (see Table 29), or they can be left unconnected.

Pin Information (continued)

Table 27. OR2C/2T10A, OR2C/2T12A, OR2C/2T15A/B, OR2C/2T26A, and OR2T40A/B 352-Pin PBGA Pinout (continued)

Pin	2C/2T10A Pad	2C/2T12A Pad	2C/2T15A/B Pad	2C/2T26A Pad	OR2T40A/B Pad	Function
A12	PT7B	PT8B	PT9B	PT10D	PT13D	I/O
B11	PT7A	PT8A	PT9A	PT10A	PT13A	I/O-D0/DIN
C12	PT6D	PT7D	PT8D	PT9D	PT12D	I/O
A11	PT6C	PT7C	PT8C	PT9A	PT12A	I/O
D12	PT6B	PT7B	PT8B	PT8D	PT11D	I/O
B10	PT6A	PT7A	PT8A	PT8A/	PT11A	I/O-DOUT
C11	PT5D	PT6D	PT7D	PT7D	PT10D	I/O
A10	PT5C	PT6C	PT7C	PT7C	PT10A	I/O
D10	PT5B	PT6B	PT7B	PT7B	PT9D	I/O
B9	PT5A	PT6A	PT7A	PT7A	PT9A	I/O
C10	PT4D	PT5D	PT6D	PT6D	PT8D	I/O
A9	PT4C	PT5C	PT6C	PT6C	PT8A	I/O
B8	PT4B	PT5B	PT6B	PT6B	PT7D	I/O
A8	PT4A	PT5A	PT6A	PT6A	PT7A	I/O-TDI
C9	—	PT4D	PT5D	PT5D	PT6D	I/O
B7	PT3D	PT4C	PT5C	PT5C	PT6C	I/O
D8	—	PT4B	PT5B	PT5B	PT6B	I/O
A7	PT3C	PT4A	PT5A	PT5A	$V_{DD}5$	I/O-$V_{DD}5$
C8	—	PT3D	PT4D	PT4D	PT5D	I/O
B6	PT3B	PT3C	PT4C	PT4C	PT5C	I/O
D7	—	PT3B	PT4B	PT4B	PT5B	I/O
A6	PT3A	PT3A	PT4A	PT4A	PT5A	I/O-TMS
C7	PT2D	PT2D	PT3D	PT3D	PT4D	I/O
B5	PT2C	PT2C	PT3A	PT3A	PT4A	I/O
A5	PT2B	PT2B	PT2D	PT2D	PT3D	I/O
C6	—	—	PT2C	PT2C	PT3C	I/O
B4	—	—	PT2B	PT2B	PT3B	I/O
D5	PT2A	PT2A	PT2A	PT2A	PT3A	I/O
A4	PT1D	PT1D	PT1D	PT1D	PT2D	I/O
C5	PT1C	PT1C	PT1C	PT1C	PT2A	I/O
B3	PT1B	PT1B	PT1B	PT1B	PT1D	I/O
C4	PT1A	PT1A	PT1A	PT1A	PT1A	I/O-TCK
A3	RD_DATA/TDO	RD_DATA/TDO	RD_DATA/TDO	RD_DATA/TDO	RD_DATA/TDO	RD_DATA/TDO
A1	V_{SS}	V_{SS}	V_{SS}	V_{SS}	V_{SS}	V_{SS}
A2	V_{SS}	V_{SS}	V_{SS}	V_{SS}	V_{SS}	V_{SS}
A26	V_{SS}	V_{SS}	V_{SS}	V_{SS}	V_{SS}	V_{SS}
AC13	V_{SS}	V_{SS}	V_{SS}	V_{SS}	V_{SS}	V_{SS}
AC18	V_{SS}	V_{SS}	V_{SS}	V_{SS}	V_{SS}	V_{SS}
AC23	V_{SS}	V_{SS}	V_{SS}	V_{SS}	V_{SS}	V_{SS}

Notes:
The pins labeled I/O-$V_{DD}5$ are user I/Os for the OR2CxxA and OR2TxxB series, but they are connected to $V_{DD}5$ for the OR2TxxA series.

The pins labeled V_{SS}-ETC are the 6 x 6 array of thermal balls located at the center of the package. The balls can be attached to the ground plane of the board for enhanced thermal capability (see Table 29), or they can be left unconnected.

Pin Information (continued)

Table 27. OR2C/2T10A, OR2C/2T12A, OR2C/2T15A/B, OR2C/2T26A, and OR2T40A/B 352-Pin PBGA Pinout (continued)

Pin	2C/2T10A Pad	2C/2T12A Pad	2C/2T15A/B Pad	2C/2T26A Pad	OR2T40A/B Pad	Function
AC4	VSS	VSS	VSS	VSS	VSS	VSS
AC8	VSS	VSS	VSS	VSS	VSS	VSS
AD24	VSS	VSS	VSS	VSS	VSS	VSS
AD3	VSS	VSS	VSS	VSS	VSS	VSS
AE1	VSS	VSS	VSS	VSS	VSS	VSS
AE2	VSS	VSS	VSS	VSS	VSS	VSS
AE25	VSS	VSS	VSS	VSS	VSS	VSS
AF1	VSS	VSS	VSS	VSS	VSS	VSS
AF25	VSS	VSS	VSS	VSS	VSS	VSS
AF26	VSS	VSS	VSS	VSS	VSS	VSS
B2	VSS	VSS	VSS	VSS	VSS	VSS
B25	VSS	VSS	VSS	VSS	VSS	VSS
B26	VSS	VSS	VSS	VSS	VSS	VSS
C24	VSS	VSS	VSS	VSS	VSS	VSS
C3	VSS	VSS	VSS	VSS	VSS	VSS
D14	VSS	VSS	VSS	VSS	VSS	VSS
D19	VSS	VSS	VSS	VSS	VSS	VSS
D23	VSS	VSS	VSS	VSS	VSS	VSS
D4	VSS	VSS	VSS	VSS	VSS	VSS
D9	VSS	VSS	VSS	VSS	VSS	VSS
H4	VSS	VSS	VSS	VSS	VSS	VSS
J23	VSS	VSS	VSS	VSS	VSS	VSS
N4	VSS	VSS	VSS	VSS	VSS	VSS
P23	VSS	VSS	VSS	VSS	VSS	VSS
V4	VSS	VSS	VSS	VSS	VSS	VSS
W23	VSS	VSS	VSS	VSS	VSS	VSS
AA23	VDD	VDD	VDD	VDD	VDD	VDD
AA4	VDD	VDD	VDD	VDD	VDD	VDD
AC11	VDD	VDD	VDD	VDD	VDD	VDD
AC16	VDD	VDD	VDD	VDD	VDD	VDD
AC21	VDD	VDD	VDD	VDD	VDD	VDD
AC6	VDD	VDD	VDD	VDD	VDD	VDD
D11	VDD	VDD	VDD	VDD	VDD	VDD
D16	VDD	VDD	VDD	VDD	VDD	VDD
D21	VDD	VDD	VDD	VDD	VDD	VDD
D6	VDD	VDD	VDD	VDD	VDD	VDD
F23	VDD	VDD	VDD	VDD	VDD	VDD
F4	VDD	VDD	VDD	VDD	VDD	VDD
L23	VDD	VDD	VDD	VDD	VDD	VDD

Notes:
The pins labeled I/O-VDD5 are user I/Os for the OR2CxxA and OR2TxxB series, but they are connected to VDD5 for the OR2TxxA series.

The pins labeled VSS-ETC are the 6 x 6 array of thermal balls located at the center of the package. The balls can be attached to the ground plane of the board for enhanced thermal capability (see Table 29), or they can be left unconnected.

Pin Information (continued)

Table 27. OR2C/2T10A, OR2C/2T12A, OR2C/2T15A/B, OR2C/2T26A, and OR2T40A/B 352-Pin PBGA Pinout (continued)

Pin	2C/2T10A Pad	2C/2T12A Pad	2C/2T15A/B Pad	2C/2T26A Pad	OR2T40A/B Pad	Function
L4	VDD	VDD	VDD	VDD	VDD	VDD
T23	VDD	VDD	VDD	VDD	VDD	VDD
T4	VDD	VDD	VDD	VDD	VDD	VDD
L11	VSS	VSS	VSS	VSS	VSS	VSS—ETC
L12	VSS	VSS	VSS	VSS	VSS	VSS—ETC
L13	VSS	VSS	VSS	VSS	VSS	VSS—ETC
L14	VSS	VSS	VSS	VSS	VSS	VSS—ETC
L15	VSS	VSS	VSS	VSS	VSS	VSS—ETC
L16	VSS	VSS	VSS	VSS	VSS	VSS—ETC
M11	VSS	VSS	VSS	VSS	VSS	VSS—ETC
M12	VSS	VSS	VSS	VSS	VSS	VSS—ETC
M13	VSS	VSS	VSS	VSS	VSS	VSS—ETC
M14	VSS	VSS	VSS	VSS	VSS	VSS—ETC
M15	VSS	VSS	VSS	VSS	VSS	VSS—ETC
M16	VSS	VSS	VSS	VSS	VSS	VSS—ETC
N11	VSS	VSS	VSS	VSS	VSS	VSS—ETC
N12	VSS	VSS	VSS	VSS	VSS	VSS—ETC
N13	VSS	VSS	VSS	VSS	VSS	VSS—ETC
N14	VSS	VSS	VSS	VSS	VSS	VSS—ETC
N15	VSS	VSS	VSS	VSS	VSS	VSS—ETC
N16	VSS	VSS	VSS	VSS	VSS	VSS—ETC
P11	VSS	VSS	VSS	VSS	VSS	VSS—ETC
P12	VSS	VSS	VSS	VSS	VSS	VSS—ETC
P13	VSS	VSS	VSS	VSS	VSS	VSS—ETC
P14	VSS	VSS	VSS	VSS	VSS	VSS—ETC
P15	VSS	VSS	VSS	VSS	VSS	VSS—ETC
P16	VSS	VSS	VSS	VSS	VSS	VSS—ETC
R11	VSS	VSS	VSS	VSS	VSS	VSS—ETC
R12	VSS	VSS	VSS	VSS	VSS	VSS—ETC
R13	VSS	VSS	VSS	VSS	VSS	VSS—ETC
R14	VSS	VSS	VSS	VSS	VSS	VSS—ETC
R15	VSS	VSS	VSS	VSS	VSS	VSS—ETC
R16	VSS	VSS	VSS	VSS	VSS	VSS—ETC
T11	VSS	VSS	VSS	VSS	VSS	VSS—ETC
T12	VSS	VSS	VSS	VSS	VSS	VSS—ETC
T13	VSS	VSS	VSS	VSS	VSS	VSS—ETC
T14	VSS	VSS	VSS	VSS	VSS	VSS—ETC
T15	VSS	VSS	VSS	VSS	VSS	VSS—ETC
T16	VSS	VSS	VSS	VSS	VSS	VSS—ETC

Notes:
The pins labeled I/O-VDD5 are user I/Os for the OR2CxxA and OR2TxxB series, but they are connected to VDD5 for the OR2TxxA series.

The pins labeled VSS-ETC are the 6 x 6 array of thermal balls located at the center of the package. The balls can be attached to the ground plane of the board for enhanced thermal capability (see Table 29), or they can be left unconnected.

Pin Information (continued)

Table 28. OR2C/2T15A, OR2C/2T26A, and OR2C/2T40A/B 432-Pin EBGA Pinout

Pin	2C/2T15A Pad	2C/2T26A Pad	2C/2T40A/B Pad	Function
E28	PL1D	PL1D	PL1D	I/O
D29	PL1C	PL1C	PL1A	I/O
D30	PL1B	PL1B	PL2D	I/O
D31	PL1A	PL1A	PL2A	I/O
F28	PL2D	PL2D	PL3D	I/O-A0
E29	PL2C	PL2C	PL3C	I/O
E30	PL2B	PL2B	PL3B	I/O
E31	PL2A	PL2A	PL3A	I/O
F29	PL3D	PL3D	PL4D	I/O
F30	PL3C	PL3C	PL4C	I/O
F31	PL3B	PL3B	PL4B	I/O
H28	PL3A	PL3A	PL4A	I/O
G29	PL4D	PL4D	PL5D	I/O-$V_{DD}5$
G30	PL4C	PL4C	PL5C	I/O
G31	PL4B	PL4B	PL5B	I/O
J28	PL4A	PL4A	PL6D	I/O
H29	PL5D	PL5D	PL7D	I/O
H30	PL5C	PL5C	PL7C	I/O
J29	PL5B	PL5B	PL7B	I/O
K28	PL5A	PL5A	PL8D	I/O-A1
J30	PL6D	PL6D	PL9D	I/O
J31	PL6C	PL6C	PL9C	I/O
K29	PL6B	PL6B	PL9B	I/O
K30	PL6A	PL6A	PL9A	I/O-A2
K31	PL7D	PL7D	PL10D	I/O
L29	PL7C	PL7C	PL10C	I/O
M28	PL7B	PL7B	PL10B	I/O
L30	PL7A	PL7A	PL10A	I/O-A3
L31	—	PL8D	PL11D	I/O-$V_{DD}5$
M29	PL8D	PL8C	PL11C	I/O
N28	PL8C	PL8A	PL11A	I/O
M30	PL8B	PL9D	PL12D	I/O
N29	—	PL9C	PL12C	I/O
N30	PL8A	PL9A	PL12A	I/O-A4
P28	PL9D	PL10D	PL13D	I/O-A5
N31	—	PL10C	PL13C	I/O
P29	PL9C	PL10A	PL13A	I/O
P30	PL9B	PL11D	PL14D	I/O
P31	PL9A	PL11A	PL14A	I/O-A6
R29	PL10D	PL12D	PL15D	I/O
R30	PL10C	PL12C	PL15C	I/O
R31	PL10B	PL12B	PL15B	I/O
T29	PL10A	PL12A	PL15A	I/O-A7

Notes:
The OR2T15A pin AG2 is not connected in the 432-pin EBGA package.

The pins labeled I/O-$V_{DD}5$ are user I/Os for the OR2CxxA and OR2TxxB series, but they are connected to $V_{DD}5$ for the OR2TxxA series.

Pin Information (continued)

Table 28. OR2C/2T15A, OR2C/2T26A, and OR2C/2T40A/B 432-Pin EBGA Pinout (continued)

Pin	2C/2T15A Pad	2C/2T26A Pad	2C/2T40A/B Pad	Function
T28	PL11D	PL13D	PL16D	I/O
T30	PL11C	PL13C	PL16C	I/O-VDD5
U31	PL11B	PL13B	PL16B	I/O
U30	PL11A	PL13A	PL16A	I/O-A8
U29	PL12D	PL14D	PL17D	I/O-A9
V31	—	PL14C	PL17C	I/O
V30	PL12C	PL14A	PL17A	I/O
V29	PL12B	PL15D	PL18D	I/O
W31	—	PL15C	PL18C	I/O
V28	PL12A	PL15A	PL18A	I/O-A10
W30	PL13D	PL16D	PL19D	I/O
W29	—	PL16C	PL19C	I/O
Y30	PL13C	PL16A	PL19A	I/O
W28	PL13B	PL17D	PL20D	I/O
Y29	PL13A	PL17A	PL20A	I/O-A11
AA31	PL14D	PL18D	PL21D	I/O-A12
AA30	PL14C	PL18C	PL21C	I/O
Y28	PL14B	PL18B	PL21B	I/O
AA29	PL14A	PL18A	PL21A	I/O
AB31	PL15D	PL19D	PL22D	I/O
AB30	PL15C	PL19C	PL22C	I/O
AB29	PL15B	PL19B	PL22B	I/O-A13
AC31	PL15A	PL19A	PL22A	I/O
AC30	PL16D	PL20D	PL23D	I/O
AB28	PL16C	PL20C	PL23C	I/O
AC29	PL16B	PL20B	PL24D	I/O
AD30	PL16A	PL20A	PL25D	I/O
AD29	PL17D	PL21D	PL25A	I/O-A14
AC28	PL17C	PL21C	PL26C	I/O
AE31	PL17B	PL21B	PL26B	I/O
AE30	PL17A	PL21A	PL26A	I/O
AE29	PL18D	PL22D	PL27D	I/O-VDD5
AD28	PL18C	PL22C	PL27C	I/O
AF31	PL18B	PL22B	PL27B	I/O
AF30	PL18A	PL22A	PL27A	I/O
AF29	PL19D	PL23D	PL28D	I/O
AG31	PL19C	PL23C	PL28C	I/O
AG30	PL19B	PL23B	PL28B	I/O
AG29	PL19A	PL23A	PL28A	I/O
AF28	PL20D	PL24D	PL29A	I/O
AH31	PL20C	PL24C	PL30C	I/O
AH30	PL20B	PL24B	PL30B	I/O
AH29	PL20A	PL24A	PL30A	I/O-A15
AG28	CCLK	CCLK	CCLK	CCLK

Notes:
The OR2T15A pin AG2 is not connected in the 432-pin EBGA package.

The pins labeled I/O-VDD5 are user I/Os for the OR2CxxA and OR2TxxB series, but they are connected to VDD5 for the OR2TxxA series.

Pin Information (continued)

Table 28. OR2C/2T15A, OR2C/2T26A, and OR2C/2T40A/B 432-Pin EBGA Pinout (continued)

Pin	2C/2T15A Pad	2C/2T26A Pad	2C/2T40A/B Pad	Function
AH27	PB1A	PB1A	PB1A	I/O-A16
AJ28	PB1B	PB1B	PB1B	I/O
AK28	PB1C	PB1C	PB2A	I/O
AL28	PB1D	PB1D	PB2D	I/O
AH26	PB2A	PB2A	PB3A	I/O
AJ27	PB2B	PB2B	PB3B	I/O
AK27	PB2C	PB2C	PB3C	I/O
AL27	PB2D	PB2D	PB3D	I/O-$V_{DD}5$
AJ26	PB3A	PB3A	PB4A	I/O
AK26	PB3B	PB3B	PB4B	I/O
AL26	PB3C	PB3C	PB4C	I/O
AH24	PB3D	PB3D	PB4D	I/O
AJ25	PB4A	PB4A	PB5A	I/O
AK25	PB4B	PB4B	PB5B	I/O
AL25	PB4C	PB4C	PB5C	I/O
AH23	PB4D	PB4D	PB5D	I/O-A17
AJ24	PB5A	PB5A	PB6A	I/O
AK24	PB5B	PB5B	PB6B	I/O
AJ23	PB5C	PB5C	PB6C	I/O
AH22	PB5D	PB5D	PB6D	I/O
AK23	PB6A	PB6A	PB7A	I/O
AL23	PB6B	PB6B	PB7D	I/O
AJ22	PB6C	PB6C	PB8A	I/O
AK22	PB6D	PB6D	PB8D	I/O
AL22	PB7A	PB7A	PB9A	I/O
AJ21	PB7B	PB7B	PB9D	I/O
AH20	PB7C	PB7C	PB10A	I/O
AK21	PB7D	PB7D	PB10D	I/O
AL21	—	PB8A	PB11A	I/O-$V_{DD}5$
AJ20	PB8A	PB8B	PB11B	I/O
AH19	PB8B	PB8D	PB11D	I/O
AK20	PB8C	PB9A	PB12A	I/O
AJ19	—	PB9B	PB12B	I/O
AK19	PB8D	PB9D	PB12D	I/O
AH18	PB9A	PB10A	PB13A	I/O
AL19	PB9B	PB10D	PB13D	I/O
AJ18	PB9C	PB11A	PB14A	I/O
AK18	—	PB11B	PB14B	I/O
AL18	PB9D	PB11D	PB14D	I/O
AJ17	PB10A	PB12A	PB15A	I/O
AK17	PB10B	PB12B	PB15B	I/O
AL17	PB10C	PB12C	PB15C	I/O
AJ16	PB10D	PB12D	PB15D	I/O
AH16	PB11A	PB13A	PB16A	I/O

Notes:
The OR2T15A pin AG2 is not connected in the 432-pin EBGA package.

The pins labeled I/O-$V_{DD}5$ are user I/Os for the OR2CxxA and OR2TxxB series, but they are connected to $V_{DD}5$ for the OR2TxxA series.

Pin Information (continued)

Table 28. OR2C/2T15A, OR2C/2T26A, and OR2C/2T40A/B 432-Pin EBGA Pinout (continued)

Pin	2C/2T15A Pad	2C/2T26A Pad	2C/2T40A/B Pad	Function
AK16	PB11B	PB13B	PB16B	I/O
AL15	PB11C	PB13C	PB16C	I/O
AK15	PB11D	PB13D	PB16D	I/O
AJ15	PB12A	PB14A	PB17A	I/O-$V_{DD}5$
AL14	PB12B	PB14D	PB17D	I/O
AK14	PB12C	PB15A	PB18A	I/O
AJ14	—	PB15B	PB18B	I/O
AL13	PB12D	PB15D	PB18D	I/O
AH14	PB13A	PB16A	PB19A	I/O-HDC
AK13	—	PB16B	PB19B	I/O
AJ13	PB13B	PB16D	PB19D	I/O
AK12	PB13C	PB17A	PB20A	I/O
AH13	—	PB17B	PB20B	I/O
AJ12	PB13D	PB17D	PB20D	I/O
AL11	PB14A	PB18A	PB21A	I/O-$\overline{LDC}$
AK11	PB14B	PB18B	PB21D	I/O
AH12	PB14C	PB18C	PB22A	I/O
AJ11	PB14D	PB18D	PB22D	I/O
AL10	PB15A	PB19A	PB23A	I/O
AK10	PB15B	PB19B	PB24A	I/O
AJ10	PB15C	PB19C	PB24C	I/O
AL9	PB15D	PB19D	PB24D	I/O
AK9	PB16A	PB20A	PB25A	I/O-$\overline{INIT}$
AH10	PB16B	PB20B	PB25B	I/O
AJ9	PB16C	PB20C	PB25C	I/O
AK8	PB16D	PB20D	PB25D	I/O
AJ8	PB17A	PB21A	PB26A	I/O-$V_{DD}5$
AH9	PB17B	PB21B	PB26B	I/O
AL7	PB17C	PB21C	PB26C	I/O
AK7	PB17D	PB21D	PB26D	I/O
AJ7	PB18A	PB22A	PB27A	I/O
AH8	PB18B	PB22B	PB27B	I/O
AL6	PB18C	PB22C	PB27C	I/O
AK6	PB18D	PB22D	PB27D	I/O
AJ6	PB19A	PB23A	PB28A	I/O
AL5	PB19B	PB23B	PB28B	I/O
AK5	PB19C	PB23C	PB28C	I/O
AJ5	PB19D	PB23D	PB28D	I/O
AH6	PB20A	PB24A	PB29A	I/O
AL4	PB20B	PB24B	PB29D	I/O
AK4	PB20C	PB24C	PB30C	I/O
AJ4	PB20D	PB24D	PB30D	I/O
AH5	DONE	DONE	DONE	DONE
AG4	$\overline{RESET}$	$\overline{RESET}$	$\overline{RESET}$	$\overline{RESET}$

Notes:
The OR2T15A pin AG2 is not connected in the 432-pin EBGA package.

The pins labeled I/O-$V_{DD}5$ are user I/Os for the OR2CxxA and OR2TxxB series, but they are connected to $V_{DD}5$ for the OR2TxxA series.

Pin Information (continued)

Table 28. OR2C/2T15A, OR2C/2T26A, and OR2C/2T40A/B 432-Pin EBGA Pinout (continued)

Pin	2C/2T15A Pad	2C/2T26A Pad	2C/2T40A/B Pad	Function
AH3	$\overline{\text{PRGM}}$	$\overline{\text{PRGM}}$	$\overline{\text{PRGM}}$	$\overline{\text{PRGM}}$
AH2	PR20A	PR24A	PR30A	I/O-M0
AH1	PR20B	PR24B	PR30B	I/O
AF4	PR20C	PR24C	PR29A	I/O
AG3	PR20D	PR24D	PR29D	I/O
AG2	PR19A	PR23A	PR28A	I/O-$V_{DD}5$
AG1	PR19B	PR23B	PR28B	I/O
AF3	PR19C	PR23C	PR28C	I/O
AF2	PR19D	PR23D	PR28D	I/O
AF1	PR18A	PR22A	PR27A	I/O
AD4	PR18B	PR22B	PR27B	I/O
AE3	PR18C	PR22C	PR27C	I/O
AE2	PR18D	PR22D	PR27D	I/O
AE1	PR17A	PR21A	PR26A	I/O
AC4	PR17B	PR21B	PR26B	I/O
AD3	PR17C	PR21C	PR26C	I/O
AD2	PR17D	PR21D	PR25A	I/O
AC3	PR16A	PR20A	PR24A	I/O
AB4	PR16B	PR20B	PR24B	I/O
AC2	PR16C	PR20C	PR24D	I/O
AC1	PR16D	PR20D	PR23D	I/O-M1
AB3	PR15A	PR19A	PR22A	I/O
AB2	PR15B	PR19B	PR22B	I/O
AB1	PR15C	PR19C	PR22C	I/O
AA3	PR15D	PR19D	PR22D	I/O-$V_{DD}5$
Y4	PR14A	PR18A	PR21A	I/O
AA2	PR14B	PR18B	PR21B	I/O
AA1	PR14C	PR18C	PR21C	I/O
Y3	PR14D	PR18D	PR21D	I/O
W4	PR13A	PR17A	PR20A	I/O-M2
Y2	PR13B	PR17D	PR20D	I/O
W3	PR13C	PR16A	PR19A	I/O
W2	PR13D	PR16B	PR19B	I/O
V4	—	PR16D	PR19D	I/O
W1	PR12A	PR15A	PR18A	I/O-M3
V3	—	PR15D	PR18D	I/O
V2	PR12B	PR14A	PR17A	I/O
V1	PR12C	PR14B	PR17B	I/O
U3	PR12D	PR14D	PR17D	I/O
U2	PR11A	PR13A	PR16A	I/O
U1	PR11B	PR13B	PR16B	I/O
T3	PR11C	PR13C	PR16C	I/O
T4	PR11D	PR13D	PR16D	I/O
T2	PR10A	PR12A	PR15A	I/O

Notes:
The OR2T15A pin AG2 is not connected in the 432-pin EBGA package.

The pins labeled I/O-$V_{DD}5$ are user I/Os for the OR2CxxA and OR2TxxB series, but they are connected to $V_{DD}5$ for the OR2TxxA series.

Pin Information (continued)

Table 28. OR2C/2T15A, OR2C/2T26A, and OR2C/2T40A/B 432-Pin EBGA Pinout (continued)

Pin	2C/2T15A Pad	2C/2T26A Pad	2C/2T40A/B Pad	Function
R1	PR10B	PR12B	PR15B	I/O
R2	PR10C	PR12C	PR15C	I/O
R3	PR10D	PR12D	PR15D	I/O
P1	PR9A	PR11A	PR14A	I/O-$V_{DD}5$
P2	PR9B	PR11C	PR14C	I/O
P3	PR9C	PR11D	PR14D	I/O
N1	—	PR10A	PR13A	I/O
P4	PR9D	PR10C	PR13C	I/O
N2	—	PR10D	PR13D	I/O
N3	PR8A	PR9A	PR12A	I/O-CS1
M2	PR8B	PR9D	PR12D	I/O
N4	PR8C	PR8A	PR11A	I/O
M3	PR8D	PR8D	PR11D	I/O
L1	PR7A	PR7A	PR10A	I/O-$\overline{CS0}$
L2	PR7B	PR7B	PR10B	I/O
M4	PR7C	PR7C	PR10C	I/O
L3	PR7D	PR7D	PR10D	I/O
K1	PR6A	PR6A	PR9A	I/O
K2	PR6B	PR6B	PR9B	I/O
K3	PR6C	PR6C	PR9C	I/O
J1	PR6D	PR6D	PR9D	I/O
J2	PR5A	PR5A	PR8A	I/O-$\overline{RD}$
K4	PR5B	PR5B	PR7A	I/O
J3	PR5C	PR5C	PR7C	I/O
H2	PR5D	PR5D	PR6A	I/O
H3	PR4A	PR4A	PR5A	I/O-$V_{DD}5$
J4	PR4B	PR4B	PR5B	I/O
G1	PR4C	PR4C	PR5C	I/O
G2	PR4D	PR4D	PR5D	I/O
G3	PR3A	PR3A	PR4A	I/O-$\overline{WR}$
H4	PR3B	PR3B	PR4B	I/O
F1	PR3C	PR3C	PR4C	I/O
F2	PR3D	PR3D	PR4D	I/O
F3	PR2A	PR2A	PR3A	I/O
E1	PR2B	PR2B	PR3B	I/O
E2	PR2C	PR2C	PR3C	I/O
E3	PR2D	PR2D	PR3D	I/O
F4	PR1A	PR1A	PR2A	I/O
D1	PR1B	PR1B	PR2D	I/O
D2	PR1C	PR1C	PR1A	I/O
D3	PR1D	PR1D	PR1D	I/O
E4	$\overline{RD\_CFGN}$	$\overline{RD\_CFGN}$	$\overline{RD\_CFGN}$	$\overline{RD\_CFGN}$
D5	PT20D	PT24D	PT30D	I/O
C4	PT20C	PT24C	PT30A	I/O

Notes:
The OR2T15A pin AG2 is not connected in the 432-pin EBGA package.

The pins labeled I/O-$V_{DD}5$ are user I/Os for the OR2CxxA and OR2TxxB series, but they are connected to $V_{DD}5$ for the OR2TxxA series.

Pin Information (continued)

Table 28. OR2C/2T15A, OR2C/2T26A, and OR2C/2T40A/B 432-Pin EBGA Pinout (continued)

Pin	2C/2T15A Pad	2C/2T26A Pad	2C/2T40A/B Pad	Function
B4	PT20B	PT24B	PT29B	I/O
A4	PT20A	PT24A	PT29A	I/O
D6	PT19D	PT23D	PT28D	I/O
C5	PT19C	PT23C	PT28C	I/O
B5	PT19B	PT23B	PT28B	I/O
A5	PT19A	PT23A	PT28A	I/O-RDY/RCLK
C6	PT18D	PT22D	PT27D	I/O
B6	PT18C	PT22C	PT27C	I/O
A6	PT18B	PT22B	PT27B	I/O
D8	PT18A	PT22A	PT27A	I/O
C7	PT17D	PT21D	PT26D	I/O
B7	PT17C	PT21C	PT26C	I/O
A7	PT17B	PT21B	PT26B	I/O
D9	PT17A	PT21A	PT26A	I/O
C8	PT16D	PT20D	PT25D	I/O-D7
B8	PT16C	PT20C	PT25C	I/O
C9	PT16B	PT20B	PT25B	I/O
D10	PT16A	PT20A	PT25A	I/O
B9	PT15D	PT19D	PT24D	I/O-$V_{DD}5$
A9	PT15C	PT19C	PT24C	I/O
C10	PT15B	PT19B	PT24B	I/O
B10	PT15A	PT19A	PT23D	I/O
A10	PT14D	PT18D	PT22D	I/O
C11	PT14C	PT18C	PT22A	I/O
D12	PT14B	PT18B	PT21D	I/O-D6
B11	PT14A	PT18A	PT21A	I/O
A11	PT13D	PT17D	PT20D	I/O
C12	PT13C	PT17A	PT20A	I/O
D13	—	PT16D	PT19D	I/O-$V_{DD}5$
B12	PT13B	PT16B	PT19B	I/O
C13	PT13A	PT16A	PT19A	I/O-D5
B13	PT12D	PT15D	PT18D	I/O
D14	—	PT15B	PT18B	I/O
A13	PT12C	PT15A	PT18A	I/O
C14	PT12B	PT14D	PT17D	I/O
B14	—	PT14B	PT17B	I/O
A14	PT12A	PT14A	PT17A	I/O-D4
C15	PT11D	PT13D	PT16D	I/O
B15	PT11C	PT13C	PT16C	I/O
A15	PT11B	PT13B	PT16B	I/O
C16	PT11A	PT13A	PT16A	I/O-D3
D16	PT10D	PT12D	PT15D	I/O
B16	PT10C	PT12C	PT15C	I/O
A17	PT10B	PT12B	PT15B	I/O-$V_{DD}5$

Notes:
The OR2T15A pin AG2 is not connected in the 432-pin EBGA package.

The pins labeled I/O-$V_{DD}5$ are user I/Os for the OR2CxxA and OR2TxxB series, but they are connected to $V_{DD}5$ for the OR2TxxA series.

Pin Information (continued)

Table 28. OR2C/2T15A, OR2C/2T26A, and OR2C/2T40A/B 432-Pin EBGA Pinout (continued)

Pin	2C/2T15A Pad	2C/2T26A Pad	2C/2T40A/B Pad	Function
B17	PT10A	PT12A	PT15A	I/O-D2
C17	PT9D	PT11D	PT14D	D1
A18	—	PT11C	PT14C	I/O
B18	PT9C	PT11A	PT14A	I/O
C18	PT9B	PT10D	PT13D	I/O
A19	—	PT10C	PT13C	I/O
D18	PT9A	PT10A	PT13A	I/O-D0/DIN
B19	PT8D	PT9D	PT12D	I/O
C19	—	PT9C	PT12C	I/O
B20	PT8C	PT9A	PT12A	I/O
D19	PT8B	PT8D	PT11D	I/O
C20	PT8A	PT8A	PT11A	I/O-DOUT
A21	PT7D	PT7D	PT10D	I/O
B21	PT7C	PT7C	PT10A	I/O
D20	PT7B	PT7B	PT9D	I/O
C21	PT7A	PT7A	PT9A	I/O
A22	PT6D	PT6D	PT8D	I/O
B22	PT6C	PT6C	PT8A	I/O
C22	PT6B	PT6B	PT7D	I/O
A23	PT6A	PT6A	PT7A	I/O-TDI
B23	PT5D	PT5D	PT6D	I/O
D22	PT5C	PT5C	PT6C	I/O
C23	PT5B	PT5B	PT6B	I/O
B24	PT5A	PT5A	PT6A	I/O-$V_{DD}5$
C24	PT4D	PT4D	PT5D	I/O
D23	PT4C	PT4C	PT5C	I/O
A25	PT4B	PT4B	PT5B	I/O
B25	PT4A	PT4A	PT5A	I/O-TMS
C25	PT3D	PT3D	PT4D	I/O
D24	PT3C	PT3C	PT4C	I/O
A26	PT3B	PT3B	PT4B	I/O
B26	PT3A	PT3A	PT4A	I/O
C26	PT2D	PT2D	PT3D	I/O
A27	PT2C	PT2C	PT3C	I/O
B27	PT2B	PT2B	PT3B	I/O
C27	PT2A	PT2A	PT3A	I/O
D26	PT1D	PT1D	PT2D	I/O
A28	PT1C	PT1C	PT2A	I/O
B28	PT1B	PT1B	PT1D	I/O
C28	PT1A	PT1A	PT1A	I/O-TCK
D27	RD_DATA/TDO	RD_DATA/TDO	RD_DATA/TDO	RD_DATA/TDO
A12	V_{SS}	V_{SS}	V_{SS}	V_{SS}
A16	V_{SS}	V_{SS}	V_{SS}	V_{SS}
A2	V_{SS}	V_{SS}	V_{SS}	V_{SS}

Notes:
The OR2T15A pin AG2 is not connected in the 432-pin EBGA package.

The pins labeled I/O-$V_{DD}5$ are user I/Os for the OR2CxxA and OR2TxxB series, but they are connected to $V_{DD}5$ for the OR2TxxA series.

Pin Information (continued)

Table 28. OR2C/2T15A, OR2C/2T26A, and OR2C/2T40A/B 432-Pin EBGA Pinout (continued)

Pin	2C/2T15A Pad	2C/2T26A Pad	2C/2T40A/B Pad	Function
A20	VSS	VSS	VSS	VSS
A24	VSS	VSS	VSS	VSS
A29	VSS	VSS	VSS	VSS
A3	VSS	VSS	VSS	VSS
A30	VSS	VSS	VSS	VSS
A8	VSS	VSS	VSS	VSS
AD1	VSS	VSS	VSS	VSS
AD31	VSS	VSS	VSS	VSS
AJ1	VSS	VSS	VSS	VSS
AJ2	VSS	VSS	VSS	VSS
AJ30	VSS	VSS	VSS	VSS
AJ31	VSS	VSS	VSS	VSS
AK1	VSS	VSS	VSS	VSS
AK29	VSS	VSS	VSS	VSS
AK3	VSS	VSS	VSS	VSS
AK31	VSS	VSS	VSS	VSS
AL12	VSS	VSS	VSS	VSS
AL16	VSS	VSS	VSS	VSS
AL2	VSS	VSS	VSS	VSS
AL20	VSS	VSS	VSS	VSS
AL24	VSS	VSS	VSS	VSS
AL29	VSS	VSS	VSS	VSS
AL3	VSS	VSS	VSS	VSS
AL30	VSS	VSS	VSS	VSS
AL8	VSS	VSS	VSS	VSS
B1	VSS	VSS	VSS	VSS
B29	VSS	VSS	VSS	VSS
B3	VSS	VSS	VSS	VSS
B31	VSS	VSS	VSS	VSS
C1	VSS	VSS	VSS	VSS
C2	VSS	VSS	VSS	VSS
C30	VSS	VSS	VSS	VSS
C31	VSS	VSS	VSS	VSS
H1	VSS	VSS	VSS	VSS
H31	VSS	VSS	VSS	VSS
M1	VSS	VSS	VSS	VSS
M31	VSS	VSS	VSS	VSS
T1	VSS	VSS	VSS	VSS
T31	VSS	VSS	VSS	VSS
Y1	VSS	VSS	VSS	VSS
Y31	VSS	VSS	VSS	VSS
A1	VDD	VDD	VDD	VDD
A31	VDD	VDD	VDD	VDD

Notes:
The OR2T15A pin AG2 is not connected in the 432-pin EBGA package.

The pins labeled I/O-VDD5 are user I/Os for the OR2CxxA and OR2TxxB series, but they are connected to VDD5 for the OR2TxxA series.

Pin Information (continued)

Table 28. OR2C/2T15A, OR2C/2T26A, and OR2C/2T40A/B 432-Pin EBGA Pinout (continued)

Pin	2C/2T15A Pad	2C/2T26A Pad	2C/2T40A/B Pad	Function
AA28	VDD	VDD	VDD	VDD
AA4	VDD	VDD	VDD	VDD
AE28	VDD	VDD	VDD	VDD
AE4	VDD	VDD	VDD	VDD
AH11	VDD	VDD	VDD	VDD
AH15	VDD	VDD	VDD	VDD
AH17	VDD	VDD	VDD	VDD
AH21	VDD	VDD	VDD	VDD
AH25	VDD	VDD	VDD	VDD
AH28	VDD	VDD	VDD	VDD
AH4	VDD	VDD	VDD	VDD
AH7	VDD	VDD	VDD	VDD
AJ29	VDD	VDD	VDD	VDD
AJ3	VDD	VDD	VDD	VDD
AK2	VDD	VDD	VDD	VDD
AK30	VDD	VDD	VDD	VDD
AL1	VDD	VDD	VDD	VDD
AL31	VDD	VDD	VDD	VDD
B2	VDD	VDD	VDD	VDD
B30	VDD	VDD	VDD	VDD
C29	VDD	VDD	VDD	VDD
C3	VDD	VDD	VDD	VDD
D11	VDD	VDD	VDD	VDD
D15	VDD	VDD	VDD	VDD
D17	VDD	VDD	VDD	VDD
D21	VDD	VDD	VDD	VDD
D25	VDD	VDD	VDD	VDD
D28	VDD	VDD	VDD	VDD
D4	VDD	VDD	VDD	VDD
D7	VDD	VDD	VDD	VDD
G28	VDD	VDD	VDD	VDD
G4	VDD	VDD	VDD	VDD
L28	VDD	VDD	VDD	VDD
L4	VDD	VDD	VDD	VDD
R28	VDD	VDD	VDD	VDD
R4	VDD	VDD	VDD	VDD
U28	VDD	VDD	VDD	VDD
U4	VDD	VDD	VDD	VDD

Notes:
The OR2T15A pin AG2 is not connected in the 432-pin EBGA package.

The pins labeled I/O-VDD5 are user I/Os for the OR2CxxA and OR2TxxB series, but they are connected to VDD5 for the OR2TxxA series.

Package Thermal Characteristics

There are three thermal parameters that are in common use: ΘJA, ψJC, and ΘJC. It should be noted that all the parameters are affected, to varying degrees, by package design (including paddle size) and choice of materials, the amount of copper in the test board or system board, and system airflow.

The data base containing the thermal values for all of Lucent Technologies' IC packages is currently being updated to conform to modern JEDEC standards. Thus, Table 29 contains the currently available thermal specifications for Lucent Technologies' FPGA packages mounted on both JEDEC and non-JEDEC test boards. The thermal values for the newer package types correspond to those packages mounted on a JEDEC four-layer board (indicated as Note 2 in the table). The values for the older packages, however, correspond to those packages mounted on a non-JEDEC, single-layer, sparse copper board (see Note 1). It should also be noted that the values for the older packages are considered conservative.

ΘJA

This is the thermal resistance from junction to ambient (a.k.a. theta-JA, R-theta, etc.).

$$\Theta JA = \frac{TJ - TA}{Q}$$

where T_J is the junction temperature, T_A is the ambient air temperature, and Q is the chip power.

Experimentally, ΘJA is determined when a special thermal test die is assembled into the package of interest, and the part is mounted on the thermal test board. The diodes on the test chip are separately calibrated in an oven. The package/board is placed either in a JEDEC natural convection box or in the wind tunnel, the latter for forced convection measurements. A controlled amount of power (Q) is dissipated in the test chip's heater resistor, the chip's temperature (T_J) is determined by the forward drop on the diodes, and the ambient temperature (T_A) is noted. Note that ΘJA is expressed in units of °C/watt.

ΨJC

This JEDEC designated parameter correlates the junction temperature to the case temperature. It is generally used to infer the junction temperature while the device is operating in the system. It is not considered a true thermal resistance, and it is defined by:

$$\Psi JC = \frac{TJ - TC}{Q}$$

where T_C is the case temperature at top dead center, T_J is the junction temperature, and Q is the chip power. During the ΘJA measurements described above, besides the other parameters measured, an additional temperature reading, T_C, is made with a thermocouple attached at top-dead-center of the case. ΨJC is also expressed in units of °C/watt.

ΘJC

This is the thermal resistance from junction to case. It is most often used when attaching a heat sink to the top of the package. It is defined by:

$$\Theta JC = \frac{TJ - TC}{Q}$$

The parameters in this equation have been defined above. However, the measurements is performed with the case of the part pressed against a water-cooled heat sink so as to draw most of the heat generated by the chip out the top of the package. It is this difference in the measurement process that differentiates ΘJC from ΨJC. ΘJC is a true thermal resistance and is expressed in units of °C/watt.

ΘJB

This is the thermal resistance from junction to board (a.k.a., ΘJL). It is defined by:

$$\Theta JB = \frac{TJ - TB}{Q}$$

where T_B is the temperature of the board adjacent to a lead measured with a thermocouple. The other parameters on the right-hand side have been defined above. This is considered a true thermal resistance, and the measurement is made with a water-cooled heat sink pressed against the board so as to draw most of the heat out of the leads. Note that ΘJB is expressed in units of °C/watt, and that this parameter and the way it is measured is still in JEDEC committee.

Package Thermal Characteristics (continued)

FPGA Maximum Junction Temperature

Once the power dissipated by the FPGA has been determined (see the Estimating Power Dissipation section), the maximum junction temperature of the FPGA can be found. This is needed to determine if speed derating of the device from the 85 °C junction temperature used in all of the delay tables is needed. Using the maximum ambient temperature, T_{Amax}, and the power dissipated by the device, Q (expressed in °C), the maximum junction temperature is approximated by:

$$T_{Jmax} = T_{Amax} + (Q \bullet \Theta_{JA})$$

Table 29 lists the thermal characteristics for all packages used with the Series 2 FPGAs.

Table 29. Series 2 Plastic Package Thermal Guidelines

Package	Θ_{JA} (°C/W)			T_A = 70 °C max T_J = 125 °C max @ 0 fpm (W)
	0 fpm	200 fpm	500 fpm	
84-Pin PLCC[1]	40.0	35.0	—	1.4
100-Pin TQFP[2]	30.0—27.0	26—23	24.0—21.0	1.8—2.0
144-Pin TQFP[1]	52.0	39.0	—	1.1
160-Pin QFP[2]	24.0	21.5	20.5	2.3
208-Pin SQFP[2]	26.5	23.0	21.0	2.1
208-Pin SQFP2[2]	12.8	10.3	9.1	4.3
240-Pin SQFP[2]	25.5	22.5	21.0	2.2
240-Pin SQFP2[2]	13.0	10.0	9.0	4.2
256-Pin PBGA[2, 3]	22.5	19.0	17.5	2.4
256-Pin PBGA[2, 4]	26.0	22.0	20.5	2.1
304-Pin SQFP[2]	27.5	24.0	22.5	2.0
304-Pin SQFP2[2]	12.0	10.0	9.0	4.6
352-Pin PBGA[2, 3]	19.0	16.0	15.0	2.9
352-Pin PBGA[2, 4]	25.5	22.0	20.5	2.1
432-Pin EBGA[2]	11.0	8.5	7.5	5.0

1. Mounted on a sparse copper one-layer test board.
2. Mounted on four-layer JEDEC standard test board with two power/ground planes.
3. With thermal balls connected to board ground plane.
4. Without thermal balls connected to board ground plane.

Note: The Ψ_{JC} for the packages listed is <1 °C/W. This implies that virtually all of the heat is dissipated through the board on which the package is mounted.

Package Coplanarity

The coplanarity limits of the Series 2 series packages are as follows:

- TQFP: 3.15 mils
- PLCC and QFP: 4.0 mils
- PBGA: 8.0 mils
- SQFP: 4.0 mils (240 and 304 only)
  3.15 mils (all other sizes)
- SQFP2: 3.15 mils
- EBGA: 8.0 mils

Package Parasitics

The electrical performance of an IC package, such as signal quality and noise sensitivity, is directly affected by the package parasitics. Table 30 lists eight parasitics associated with the *ORCA* packages. These parasitics represent the contributions of all components of a package, which include the bond wires, all internal package routing, and the external leads.

Four inductances in nH are listed: L_{SW} and L_{SL}, the self-inductance of the lead; and L_{MW} and L_{ML}, the mutual inductance to the nearest neighbor lead.

Package Parasitics (continued)

These parameters are important in determining ground bounce noise and inductive crosstalk noise. Three capacitances in pF are listed: C_M, the mutual capacitance of the lead to the nearest neighbor lead; and C_1 and C_2, the total capacitance of the lead to all other leads (all other leads are assumed to be grounded). These parameters are important in determining capacitive crosstalk and the capacitive loading effect of the lead.

The parasitic values in Table 30 are for the circuit model of bond wire and package lead parasitics. If the mutual capacitance value is not used in the designer's model, then the value listed as mutual capacitance should be added to each of the C_1 and C_2 capacitors.

Table 30. Series 2 Package Parasitics

Package Type	L_{SW}	L_{MW}	R_W	C_1	C_2	C_M	L_{SL}	L_{ML}
84-Pin PLCC	3	1	140	1	1	0.5	7—11	3—6
100-Pin TQFP	3	1	150	0.5	0.5	0.4	4—6	2—3
144-Pin TQFP	3	1	140	1	1	0.6	4—6	2—2.5
160-Pin QFP	4	1.5	180	1.5	1.5	1	10—13	6—8
208-Pin SQFP	4	2	200	1	1	1	7—10	4—6
208-Pin SQFP2	4	2	200	1	1	1	6—9	4—6
240-Pin SQFP	4	2	200	1	1	1	8—12	5—8
240-Pin SQFP2	4	2	200	1	1	1	7—11	4—7
256-Pin PBGA	5	2	220	1	1	1	5—8	2—4
304-Pin SQFP	5	2	220	1	1	1	12—18	7—12
304-Pin SQFP2	5	2	220	1	1	1	11—17	7—12
352-Pin PBGA	5	2	220	1.5	1.5	1.5	7—12	3—6
432-Pin EBGA	4	1.5	500	1	1	0.3	3—5.5	0.5—1

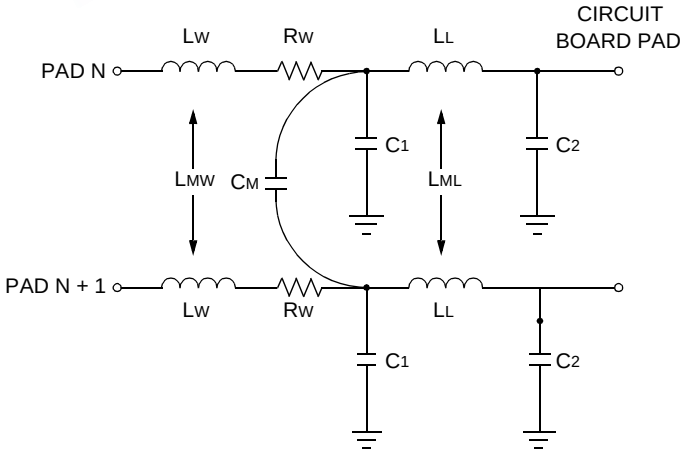

5-3862(F).r2

Figure 53. Package Parasitics

Absolute Maximum Ratings

Stresses in excess of the absolute maximum ratings can cause permanent damage to the device. These are absolute stress ratings only. Functional operation of the device is not implied at these or any other conditions in excess of those given in the operations sections of this data sheet. Exposure to absolute maximum ratings for extended periods can adversely affect device reliability.

The *ORCA* Series FPGAs include circuitry designed to protect the chips from damaging substrate injection currents and prevent accumulations of static charge. Nevertheless, conventional precautions should be observed during storage, handling, and use to avoid exposure to excessive electrical stress.

Parameter	Symbol	Min	Max	Unit
Storage Temperature	T_{stg}	–65	150	°C
Supply Voltage with Respect to Ground	V_{DD}	–0.5	7.0	V
$V_{DD}5$ Supply Voltage with Respect to Ground (OR2TxxA)	$V_{DD}5$	V_{DD}	7.0	V
Input Signal with Respect to Ground OR2TxxA only	—	–0.5	V_{DD} + 0.3 $V_{DD}5$ + 0.3	V
Signal Applied to High-impedance Output OR2TxxA only	—	–0.5	V_{DD} + 0.3 $V_{DD}5$ + 0.3	V
Maximum Soldering Temperature	—	—	260	°C

Recommended Operating Conditions

Mode	OR2CxxA		OR2TxxA/OR2TxxB		
	Temperature Range (Ambient)	Supply Voltage (V_{DD})	Temperature Range (Ambient)	Supply Voltage (V_{DD})	Supply Voltage* ($V_{DD}5$)
Commercial	0 °C to 70 °C	5 V ± 5%	0 °C to 70 °C	3.0 V to 3.6 V	V_{DD} to 5.25 V
Industrial	–40 °C to +85 °C	5 V ± 10%	–40 °C to +85 °C	3.0 V to 3.6 V	V_{DD} to 5.25 V

Notes:
During powerup and powerdown sequencing, V_{DD} is allowed to be at a higher voltage level than $V_{DD}5$ for up to 100 ms.

During powerup sequencing of OR2TxxA devices V_{DD} should reach 1.0 V before voltage applied to $V_{DD}5$ can be greater than the voltage applied to V_{DD}.

The maximum recommended junction temperature (T_J) during operation is 125 °C.

* $V_{DD}5$ not used in OR2TxxB devices.

Electrical Characteristics

Table 31A. OR2CxxA and OR2TxxA Electrical Characteristics

OR2CxxA Commercial: V_{DD} = 5.0 V ± 5%, 0 °C ≤ T_A ≤ 70 °C; OR2CxxA Industrial: V_{DD} = 5.0 V ± 10%, –40 °C ≤ T_A ≤ +85 °C. OR2TxxA Commercial: V_{DD} = 3.0 V to 3.6 V, 0 °C ≤ T_A ≤ 70 °C; OR2TxxA Industrial: V_{DD} = 3.0 V to 3.6 V, –40 °C ≤ T_A ≤ +85 °C.

Parameter	Sym-bol	Test Conditions	OR2CxxA		OR2TxxA		Unit
			Min	Max	Min	Max	
Input Voltage: High Low	 V_{IH} V_{IL}	Input configured as CMOS	 50% V_{DD} GND – 0.5	 V_{DD} + 0.3 30% V_{DD}	 50% V_{DD5} GND – 0.5	 V_{DD5} + 0.3 30% V_{DD5}	 V V
Input Voltage: High Low	 V_{IH} V_{IL}	Input configured as TTL (valid for OR2CxxA only)	 2.0 –0.5	 V_{DD} + 0.3 0.8	 — —	 — —	 V V
Output Voltage: High Low	 V_{OH} V_{OL}	 V_{DD} = min, I_{OH} = 6 mA or 3 mA V_{DD} = min, I_{OL} = 12 mA or 6 mA	 2.4 —	 — 0.4	 2.4 —	 — 0.4	 V V
Input Leakage Current	I_L	V_{DD} = Max, V_{IN} = V_{SS} or V_{DD}	–10	10	–10	10	µA
Standby Current: OR2C04A/OR2T04A OR2C06A/OR2T06A OR2C08A/OR2T08A OR2C10A/OR2T10A OR2C12A/OR2T12A OR2C15A/OR2T15A OR2C26A/OR2T26A OR2C40A/OR2T40A	I_{DDSB}	OR2CxxA (T_A = 25 °C, V_{DD} = 5.0 V) OR2TxxA (T_A = 25 °C, V_{DD} = 3.3 V) internal oscillator running, no output loads, inputs at V_{DD} or GND (after configuration)	 — — — — — — — —	 6.5 7.0 7.7 8.4 9.2 10.0 12.2 16.3	 — — — — — — — —	 4.0 4.3 4.8 5.3 5.8 6.3 7.8 10.6	 mA mA mA mA mA mA mA mA
Standby Current: OR2C04A/OR2T04A OR2C06A/OR2T06A OR2C08A/OR2T08A OR2C10A/OR2T10A OR2C12A/OR2T12A OR2C15A/OR2T15A OR2C26A/OR2T26A OR2C40A/OR2T40A	I_{DDSB}	OR2CxxA (T_A = 25 °C, V_{DD} = 5.0 V) OR2TxxA (T_A = 25 °C, V_{DD} = 3.3 V) internal oscillator stopped, no output loads, inputs at V_{DD} or GND (after configuration)	 — — — — — — — —	 1.5 2.0 2.7 3.4 4.2 5.0 7.2 11.3	 — — — — — — — —	 1.0 1.3 1.8 2.3 2.8 3.3 4.8 7.6	 mA mA mA mA mA mA mA mA
Data Retention Voltage	V_{DR}	T_A = 25 °C	2.3	—	2.3	—	V
Input Capacitance	C_{IN}	OR2CxxA (T_A = 25 °C, V_{DD} = 5.0 V) OR2TxxA (T_A = 25 °C, V_{DD} = 3.3 V) Test frequency = 1 MHz	—	9	—	9	pF
Output Capacitance	C_{OUT}	OR2CxxA (T_A = 25 °C, V_{DD} = 5.0 V) OR2TxxA (T_A = 25 °C, V_{DD} = 3.3 V) Test frequency = 1 MHz	—	9	—	9	pF
DONE Pull-up Resistor*	R_{DONE}	—	100k	—	100k	—	Ω
M3, M2, M1, and M0 Pull-up Resistors*	R_M	—	100k	—	100k	—	Ω
I/O Pad Static Pull-up Current*	I_{PU}	OR2CxxA (V_{DD} = 5.25 V, V_{IN} = V_{SS}, T_A = 0 °C) OR2TxxA (V_{DD} = 3.6 V, V_{IN} = V_{SS}, T_A = 0 °C)	14.4	50.9	14.4	50.9	µA
I/O Pad Static Pull-down Current	I_{PD}	OR2CxxA (V_{DD} = 5.25 V, V_{IN} = V_{SS}, T_A = 0 °C) OR2TxxA (V_{DD} = 3.6 V, V_{IN} = V_{SS}, T_A = 0 °C)	26	103	26	103	µA
I/O Pad Pull-up Resistor*	R_{PU}	V_{DD} = All, V_{IN} = V_{SS}, T_A = 0 °C	100k	—	100k	—	Ω
I/O Pad Pull-down Resistor	R_{PD}	V_{DD} = All, V_{IN} = V_{DD}, T_A = 0 °C	50k	—	50k	—	Ω

* On the OR2TxxA devices, the pull-up resistor will externally pull the pin to a level 1.0 V below V_{DD}.

Electrical Characteristics (continued)

Table 31B. OR2TxxB Electrical Characteristics

OR2TxxB Commercial: V_{DD} = 3.0 V to 3.6 V, 0 °C ≤ T_A ≤ 70 °C; OR2TxxB Industrial: V_{DD} = 3.0 V to 3.6 V, –40 °C ≤ T_A ≤ +85 °C.

Parameter	Symbol	Test Conditions	OR2TxxB		Unit
			Min	Max	
Input Voltage: High Low	 V_{IH} V_{IL}	Input configured as CMOS	 80% V_{DD} GND – 0.5	 V_{DD} + 0.3 15% V_{DD}	 V V
Output Voltage: High Low	 V_{OH} V_{OL}	 V_{DD} = min, I_{OH} = 6 mA or 3 mA V_{DD} = min, I_{OL} = 12 mA or 6 mA	 2.4 —	 — 0.4	 V V
Input Leakage Current	I_L	V_{DD} = max, V_{IN} = V_{SS} or V_{DD}	–10	10	µA
Standby Current: OR2T15B OR2T40B	I_{DDSB}	OR2TxxB (T_A = 25 °C, V_{DD} = 3.3 V) internal oscillator running, no output loads, inputs at V_{DD} or GND (after configuration)	 — —	 5.5 8.0	 mA mA
Standby Current: OR2T15B OR2T40B	I_{DDSB}	OR2TxxB (T_A = 25 °C, V_{DD} = 3.3 V) internal oscillator stopped, no output loads, inputs at V_{DD} or GND (after configuration)	 — —	 2.0 4.5	 mA mA
Data Retention Voltage	V_{DR}	T_A = 25 °C	2.3	—	V
Input Capacitance	C_{IN}	OR2TxxB (T_A = 25 °C, V_{DD} = 3.3 V) Test frequency = 1 MHz	—	8	pF
Output Capacitance	C_{OUT}	OR2TxxB (T_A = 25 °C, V_{DD} = 3.3 V) Test frequency = 1 MHz	—	8	pF
DONE Pull-up Resistor*	R_{DONE}	—	100k	—	Ω
M3, M2, M1, and M0 Pull-up Resistors*	R_M	—	100k	—	Ω
I/O Pad Static Pull-up Current*	I_{PU}	V_{DD} = 3.6 V, V_{IN} = V_{SS}, T_A = 0 °C	14.4	50.9	µA
I/O Pad Static Pull-down Current	I_{PD}	V_{DD} = 3.6 V, V_{IN} = V_{DD}, T_A = 0 °C	26	103	µA
I/O Pad Pull-up Resistor*	R_{PU}	V_{DD} = all, V_{IN} = V_{SS}, T_A = 0 °C	100k	—	Ω
I/O Pad Pull-down Resistor	R_{PD}	V_{DD} = all, V_{IN} = V_{DD}, T_A = 0 °C	50k	—	Ω

* On the OR2TxxB devices, the pull-up resistor will externally pull the pin to a level 1.0 V below V_{DD}.

EEPW .com.cn

Timing Characteristics

Table 32A. OR2CxxA and OR2TxxA Combinatorial PFU Timing Characteristics

OR2CxxA Commercial: V_{DD} = 5.0 V ± 5%, 0 °C ≤ T_A ≤ 70 °C; OR2CxxA Industrial: V_{DD} = 5.0 V ± 10%, –40 °C ≤ T_A ≤ +85 °C.
OR2TxxA Commercial: V_{DD} = 3.0 V to 3.6 V, 0 °C ≤ T_A ≤ 70 °C; OR2TxxA Industrial: V_{DD} = 3.0 V to 3.6 V, –40 °C ≤ T_A ≤ +85 °C.

Parameter	Symbol	Speed												Unit
		-2		-3		-4		-5		-6		-7		
		Min	Max	Min	Max	Min	Max	Min	Max	Min	Max	Min	Max	
Combinatorial Delays (T_J = +85 °C, V_{DD} = min):														
Four Input Variables (A[4:0], B[4:0] to F[3:0])	F4*_DEL	—	4.0	—	2.8	—	2.1	—	1.7	—	1.4	—	1.3	ns
Five Input Variables (A[4:0], B[4:0] to F3, F0)	F5*_DEL	—	4.1	—	2.9	—	2.2	—	1.8	—	1.4	—	1.3	ns
PFUMUX (A[4:0], B[4:0] to F1)	MUX_DEL	—	4.7	—	3.8	—	3.2	—	2.6	—	1.9	—	1.8	ns
PFUMUX (C0 to f1)	C0MUX_DEL	—	3.0	—	2.2	—	1.9	—	1.5	—	1.1	—	1.0	ns
PFUNAND (A[4:0], B[4:0] to F2)	ND_DEL	—	4.7	—	4.0	—	3.3	—	2.7	—	1.8	—	1.7	ns
PFUNAND (C0 to F2)	C0ND_DEL	—	2.7	—	2.2	—	1.8	—	1.5	—	1.0	—	0.8	ns
PFUXOR (A[4:0], B[4:0] to F1)	XOR_DEL	—	5.6	—	4.5	—	3.8	—	3.1	—	2.3	—	2.1	ns
PFUXOR (C0 to F1)	C0XOR_DEL	—	3.1	—	2.2	—	2.0	—	1.6	—	1.1	—	1.0	ns

Note: Speed grades of -5, -6, and -7 are for OR2TxxA devices only.

Table 32B. OR2TxxB Combinatorial PFU Timing Characteristics

OR2TxxB Commercial: V_{DD} = 3.0 V to 3.6 V, 0 °C ≤ T_A ≤ 70 °C; OR2TxxB Industrial: V_{DD} = 3.0 V to 3.6 V, –40 °C ≤ T_A ≤ +85 °C.

Parameter	Symbol	Speed				Unit
		-7		-8		
		Min	Max	Min	Max	
Combinatorial Delays (T_J = +85 °C, V_{DD} = min):						
Four Input Variables (A[4:0], B[4:0] to F[3:0])	F4*_DEL	—	1.3	—	1.0	ns
Five Input Variables (A[4:0], B[4:0] to F3, F0)	F5*_DEL	—	1.3	—	1.0	ns
PFUMUX (A[4:0], B[4:0] to F1)	MUX_DEL	—	2.2	—	1.8	ns
PFUMUX (C0 to F1)	C0MUX_DEL	—	1.4	—	1.0	ns
PFUNAND (A[4:0], B[4:0] to F2)	ND_DEL	—	2.1	—	1.7	ns
PFUNAND (C0 to F2)	C0ND_DEL	—	1.2	—	0.9	ns
PFUXOR (A[4:0], B[4:0] to F1)	XOR_DEL	—	2.5	—	2.0	ns
PFUXOR (C0 to F1)	C0XOR_DEL	—	1.3	—	1.0	ns

EEPW .com.cn

Timing Characteristics (continued)

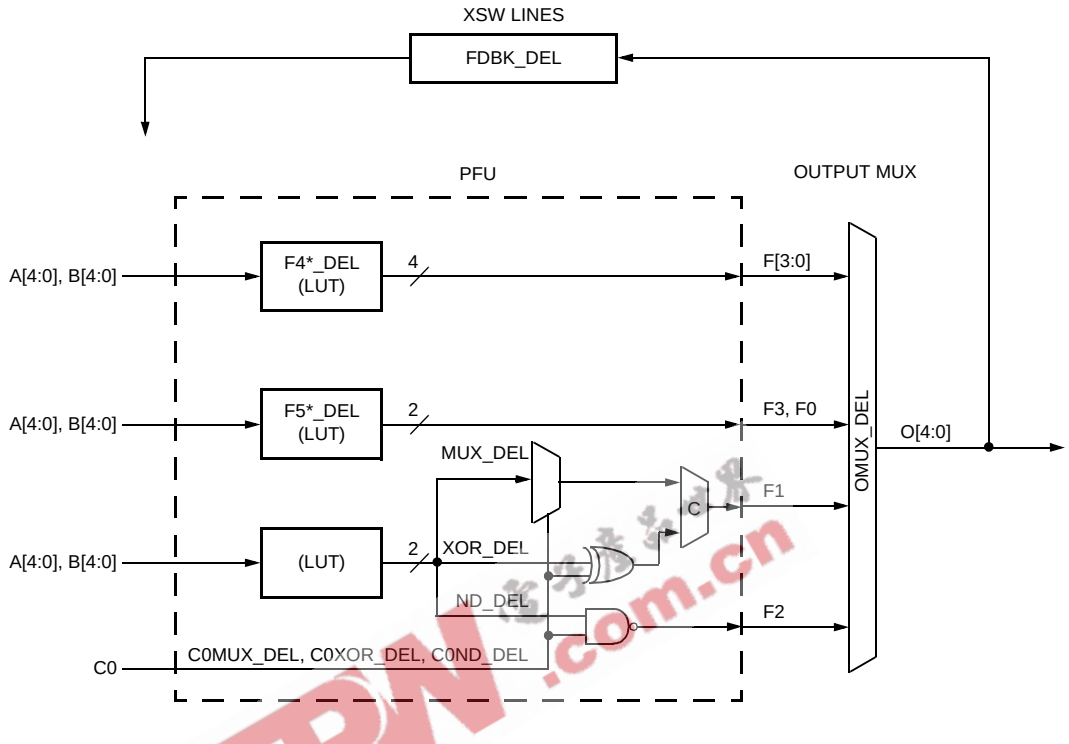

5-4633(F).a

C = controlled by configuration RAM.

Notes:
The parameters MUX_DEL, XOR_DEL, and ND_DEL include the delay through the LUT in F5A/F5B modes.

See Table 41 for an explanation of FDBK_DEL and OMUX_DEL.

Figure 54. Combinatorial PFU Timing

Timing Characteristics (continued)

Table 33A. OR2CxxA and OR2TxxA Sequential PFU Timing Characteristics

OR2CxxA Commercial: V_{DD} = 5.0 V ± 5%, 0 °C ≤ T_A ≤ 70 °C; OR2CxxA Industrial: V_{DD} = 5.0 V ± 10%, –40 °C ≤ T_A ≤ +85 °C.
OR2TxxA Commercial: V_{DD} = 3.0 V to 3.6 V, 0 °C ≤ T_A ≤ 70 °C; OR2TxxA Industrial: V_{DD} = 3.0 V to 3.6 V, –40 °C ≤ T_A ≤ +85 °C.

Parameter	Symbol	Speed												Unit
		-2		-3		-4		-5		-6		-7		
		Min	Max	Min	Max	Min	Max	Min	Max	Min	Max	Min	Max	
Input Requirements														
Clock Low Time	T_{CL}	3.2	—	2.5	—	2.0	—	1.8	—	1.7	—	1.6	—	ns
Clock High Time	T_{CH}	3.2	—	2.5	—	2.0	—	1.8	—	1.7	—	1.6	—	ns
Global S/R Pulse Width (GSRN)	T_{RW}	2.8	—	2.5	—	2.0	—	1.8	—	1.7	—	1.6	—	ns
Local S/R Pulse Width	T_{PW}	3.0	—	2.5	—	2.0	—	1.8	—	1.7	—	1.6	—	ns
Combinatorial Setup Times (T_J = 85 °C, V_{DD} = min):														
Four Input Variables to Clock (A[4:0], B[4:0] to CK)	F4*_SET	2.4	—	1.7	—	1.3	—	1.1	—	1.0	—	0.9	—	ns
Five Input Variables to Clock (A[4:0], B[4:0] to CK)	F5*_SET	2.5	—	1.9	—	1.3	—	1.2	—	1.0	—	0.9	—	ns
PFUMUX to Clock (A[4:0], B[4:0] to CK)	MUX_SET	3.9	—	2.9	—	2.3	—	2.1	—	1.6	—	1.5	—	ns
PFUMUX to Clock (C0 to CK)	C0MUX_SET	1.5	—	1.2	—	0.9	—	0.8	—	0.7	—	0.6	—	ns
PFUNAND to Clock (A[4:0], B[4:0] to CK)	ND_SET	3.9	—	2.9	—	2.2	—	2.0	—	1.7	—	1.6	—	ns
PFUNAND to Clock (C0 to CK)	C0ND_SET	1.7	—	1.2	—	0.6	—	0.5	—	0.5	—	0.5	—	ns
PFUXOR to Clock (A[4:0], B[4:0] to CK)	XOR_SET	4.8	—	3.6	—	3.0	—	2.7	—	2.1	—	2.0	—	ns
PFUXOR to Clock (C0 to CK)	C0XOR_SET	1.6	—	1.2	—	0.9	—	0.8	—	0.7	—	0.6	—	ns
Data In to Clock (WD[3:0] to CK)	D*_SET	0.5	—	0.1	—	0.1	—	0.0	—	0.1	—	0.1	—	ns
Clock Enable to Clock (CE to CK)	CKEN_SET	1.6	—	1.2	—	1.0	—	0.9	—	0.9	—	0.6	—	ns
Local Set/Reset (synchronous) (LSR to CK)	LSR_SET	1.7	—	1.4	—	1.3	—	1.2	—	1.1	—	0.8	—	ns
Data Select to Clock (SEL to CK)	SELECT_SET	1.9	—	1.5	—	1.4	—	1.3	—	1.2	—	1.0	—	ns
Pad Direct In	PDIN_SET	0.0	—	0.0	—	0.0	—	0.0	—	0.0	—	0.0	—	ns
Combinatorial Hold Times (T_J = all, V_{DD} = all):														
Data In (WD[3:0] from CK)	D*_HLD	0.6	—	0.4	—	0.4	—	0.4	—	0.3	—	0.3	—	ns
Clock Enable (CE from CK)	CKEN_HLD	0.6	—	0.4	—	0.0	—	0.0	—	0.0	—	0.0	—	ns
Local Set/Reset (synchronous) (LSR from CK)	LSR_HLD	0.0	—	0.0	—	0.0	—	0.0	—	0.0	—	0.0	—	ns
Data Select (sel from CK)	SELECT_HLD	0.0	—	0.0	—	0.0	—	0.0	—	0.0	—	0.0	—	ns
Pad Direct In Hold (DIA[3:0], DIB[3:0] to CK)[1]	PDIN_HLD	1.5	—	1.4	—	1.0	—	0.9	—	0.8	—	0.8	—	ns
All Others	—	0.0	—	0.0	—	0.0	—	0.0	—	0.0	—	0.0	—	ns
Output Characteristics														
Sequential Delays (T_J = 85 °C, V_{DD} = min):														
Local S/R (async) to PFU Out (LSR to Q[3:0])	LSR_DEL	—	4.5	—	3.4	—	3.1	—	2.5	—	2.0	—	1.6	ns
Global S/R to PFU Out (GSRN to Q[3:0])	GSR_DEL	—	2.9	—	2.3	—	2.0	—	1.6	—	1.3	—	1.2	ns
Clock to PFU Out (CK to Q[3:0])—Register	REG_DEL	—	2.4	—	2.0	—	1.9	—	1.5	—	1.3	—	1.0	ns
Clock to PFU Out (CK to Q[3:0])—Latch	LTCH_DEL	—	2.5	—	2.0	—	1.9	—	1.5	—	1.3	—	1.0	ns
Transparent Latch (WD[3:0] to Q[3:0])	LTCH_DDEL	—	3.5	—	2.7	—	2.5	—	2.0	—	2.0	—	1.8	ns

1. The input buffers contain a programmable delay to allow the hold time vs. the external clock pin to be equal to 0.

Note: Speed grades of -5, -6, and -7 are for OR2TxxA devices only.

Timing Characteristics (continued)

Table 33B. OR2TxxB Sequential PFU Timing Characteristics

OR2TxxB Commercial: V_{DD} = 3.0 V to 3.6 V, 0 °C ≤ T_A ≤ 70 °C; OR2TxxB Industrial: V_{DD} = 3.0 V to 3.6 V, –40 °C ≤ T_A ≤ +85 °C.

Parameter	Symbol	Speed				Unit
		-7		-8		
		Min	Max	Min	Max	
Input Requirements						
Clock Low Time	T_{CL}	1.7	—	1.4	—	ns
Clock High Time	T_{CH}	1.7	—	1.4	—	ns
Global S/R Pulse Width (GSRN)	T_{RW}	1.7	—	1.4	—	ns
Local S/R Pulse Width	T_{PW}	1.7	—	1.4	—	ns
Combinatorial Setup Times (T_J = 85 °C, V_{DD} = min):						
Four Input Variables to Clock (A[4:0], B[4:0] to CK)	F4*_SET	1.0	—	0.8	—	ns
Five Input Variables to Clock (A[4:0], B[4:0] to CK)	F5*_SET	1.0	—	0.8	—	ns
PFUMUX to Clock (A[4:0], B[4:0] to CK)	MUX_SET	1.3	—	1.3	—	ns
PFUMUX to Clock (C0 to CK)	C0MUX_SET	1.1	—	0.8	—	ns
PFUNAND to Clock (A[4:0], B[4:0] to CK)	ND_SET	1.0	—	0.8	—	ns
PFUNAND to Clock (C0 to CK)	C0ND_SET	0.8	—	0.7	—	ns
PFUXOR to Clock (A[4:0], B[4:0] to CK)	XOR_SET	1.3	—	1.3	—	ns
PFUXOR to Clock (C0 to CK)	C0XOR_SET	1.1	—	0.8	—	ns
Data In to Clock (WD[3:0] to CK)	D*_SET	0.2	—	0.1	—	ns
Clock Enable to Clock (CE to CK)	CKEN_SET	1.0	—	0.8	—	ns
Local Set/Reset (synchronous) (LSR to CK)	LSR_SET	1.0	—	0.8	—	ns
Data Select to Clock (SEL to CK)	SELECT_SET	1.0	—	0.8	—	ns
Pad Direct In	PDIN_SET	0.0	—	0.0	—	ns
Combinatorial Hold Times (T_J = all, V_{DD} = all):						
Data In (WD[3:0] from CK)	D*_HLD	0.0	—	0.0	—	ns
Clock Enable (CE from CK)	CKEN_HLD	0.0	—	0.0	—	ns
Local Set/Reset (synchronous) (LSR from CK)	LSR_HLD	0.0	—	0.0	—	ns
Data Select (SEL from CK)	SELECT_HLD	0.0	—	0.0	—	ns
Pad Direct In Hold (DIA[3:0], DIB[3:0] to CK)[1]	PDIN_HLD	0.1	—	0.1	—	ns
All Others	—	0.0	—	0.0	—	ns
Output Characteristics						
Sequential Delays (T_J = 85 °C, V_{DD} = min):						
Local S/R (async) to PFU Out (LSR to Q[3:0])	LSR_DEL	2.2	—	1.8	—	ns
Global S/R to PFU Out (GSRN to Q[3:0])	GSR_DEL	1.4	—	1.0	—	ns
Clock to PFU Out (CK to Q[3:0])—Register	REG_DEL	1.0	—	1.0	—	ns
Clock to PFU Out (CK to Q[3:0])—Latch	LTCH_DEL	1.0	—	1.0	—	ns
Transparent Latch (WD[3:0] to Q[3:0])	LTCH_DDEL	1.7	—	1.4	—	ns

1. The input buffers contain a programmable delay to allow the hold time vs. the external clock pin to be equal to 0.

Timing Characteristics (continued)

Table 34A. OR2CxxA and OR2TxxA Ripple Mode PFU Timing Characteristics

OR2CxxA Commercial: V_{DD} = 5.0 V ± 5%, 0 °C ≤ T_A ≤ 70 °C; OR2CxxA Industrial: V_{DD} = 5.0 V ± 10%, –40 °C ≤ T_A ≤ +85 °C.
OR2TxxA Commercial: V_{DD} = 3.0 V to 3.6 V, 0 °C ≤ T_A ≤ 70 °C; OR2TxxA Industrial: V_{DD} = 3.0 V to 3.6 V, –40 °C ≤ T_A ≤ +85 °C.

Parameter	Symbol	Speed												Unit
		-2		-3		-4		-5		-6		-7		
		Min	Max	Min	Max	Min	Max	Min	Max	Min	Max	Min	Max	
Ripple Setup Times (T_J = +85 °C, V_{DD} = min):														
Operands to Clock (A[3:0], B[3:0] to CK)	RIP_SET	6.7	—	5.0	—	3.7	—	3.3	—	2.8	—	2.5	—	ns
Bitwise Operands to Clock (A[i], B[i] to CK at F[i])	FRIP_SET	2.4	—	1.7	—	1.3	—	1.2	—	1.0	—	0.9	—	ns
Carry-in from Fast Carry to Clock (CIN to CK)	CIN_SET	4.0	—	3.2	—	1.9	—	1.7	—	1.4	—	1.3	—	ns
Carry-in from General Routing to Clock (B4 to CK)	B4_SET	4.0	—	3.2	—	1.9	—	1.7	—	1.4	—	1.3	—	ns
Add/Subtract to Clock (A4 to CK)	AS_SET	8.2	—	5.6	—	4.3	—	3.9	—	3.2	—	3.1	—	ns
Ripple Hold Times (T_J = all, V_{DD} = all): All	TH	0.0	—	0.0	—	0.0	—	0.0	—	0.0	—	0.0	—	ns
Ripple Delays (T_J = 85 °C, V_{DD} = min):														
Operands to Carry-out (A[3:0], B[3:0] to COUT)	RIP_CODEL	—	5.4	—	3.8	—	3.3	—	2.6	—	2.1	—	1.8	ns
Operands to Carry-out (A[3:0], B[3:0] to O4)	RIP_O4DEL	—	6.9	—	4.8	—	4.2	—	3.4	—	2.6	—	2.4	ns
Operands to PFU Out (A[3:0], B[3:0] to F[3:0])	RIP_DEL	—	8.2	—	6.0	—	4.7	—	3.8	—	3.2	—	2.8	ns
Bitwise Operands to PFU Out (A[i], B[i] to F[i])	FRIP_DEL	—	4.0	—	2.8	—	2.1	—	1.7	—	1.6	—	1.5	ns
Carry-in from Fast Carry to Carry-out (CIN to COUT)	CIN_CODEL	—	1.9	—	1.6	—	1.1	—	0.9	—	0.7	—	0.6	ns
Carry-in from Fast Carry to Carry-out (CIN to O4)	CIN_O4DEL	—	3.5	—	2.6	—	2.1	—	1.7	—	1.3	—	1.1	ns
Carry-in from Fast Carry to PFU Out (CIN to F[3:0])	CIN_DEL	—	5.6	—	4.2	—	2.9	—	2.3	—	2.2	—	1.7	ns
Carry-in from General Routing to Carry-out (B4 to COUT)	B4_CODEL	—	1.9	—	1.6	—	1.1	—	0.9	—	0.7	—	0.6	ns
Carry-in from General Routing to Carry-out (B4 to O4)	B4_O4DEL	—	3.5	—	2.6	—	2.1	—	1.7	—	1.3	—	1.1	ns
Carry-in from General Routing to PFU Out (B4 to F[3:0])	B4_DEL	—	5.6	—	4.2	—	2.9	—	2.3	—	2.2	—	2.1	ns
Add/Subtract to Carry-out (A4 to COUT)	AS_CODEL	—	6.1	—	4.5	—	3.9	—	3.1	—	2.5	—	2.3	ns
Add/Subtract to Carry-out (A4 to O4)	AS_O4DEL	—	7.6	—	5.6	—	4.9	—	3.9	—	3.1	—	2.8	ns
Add/Subtract to PFU Out (A4 to F[3:0])	AS_DEL	—	9.7	—	6.8	—	5.3	—	4.3	—	3.5	—	3.1	ns

Notes:
The new 4 x 1 multiplier and 4-bit comparator submodes use the appropriate ripple mode timing shown above.

Speed grades of -5, -6, and -7 are for OR2TxxA devices only.

Timing Characteristics (continued)

Table 34B. OR2TxxB Ripple Mode PFU Timing Characteristics

OR2TxxB Commercial: V_{DD} = 3.0 V to 3.6 V, 0 °C ≤ T_A ≤ 70 °C; OR2TxxB Industrial: V_{DD} = 3.0 V to 3.6 V, –40 °C ≤ T_A ≤ +85 °C.

Parameter	Symbol	Speed				Unit
		-7		-8		
		Min	Max	Min	Max	
Ripple Setup Times (T_J = 85 °C, V_{DD} = min):						
Operands to Clock (A[3:0], B[3:0] to CK)	RIP_SET	2.4	—	1.9	—	ns
Bitwise Operands to Clock (A[i], B[i] to CK at F[i])	FRIP_SET	1.1	—	0.9	—	ns
Carry-in from Fast Carry to Clock (CIN to CK)	CIN_SET	1.6	—	1.3	—	ns
Carry-in from General Routing to Clock (B4 to CK)	B4_SET	1.0	—	0.8	—	ns
Add/Subtract to Clock (A4 to CK)	AS_SET	2.9	—	2.3	—	ns
Ripple Hold Times (T_J = all, V_{DD} = all): All	TH					ns
Ripple Delays (T_J = 85 °C, V_{DD} = min):						
Operands to Carry-out (A[3:0], B[3:0] to COUT)	RIP_CODEL	2.2	—	1.8	—	ns
Operands to Carry-out (A[3:0], B[3:0] to O4)	RIP_O4DEL	3.0	—	2.4	—	ns
Operands to PFU Out (A[3:0], B[3:0] to F[3:0])	RIP_DEL	3.1	—	2.5	—	ns
Bitwise Operands to PFU Out (A[i], B[i] to F[i])	FRIP_DEL	1.4	—	1.1	—	ns
Carry-in from Fast Carry to Carry-out (CIN to COUT)	CIN_CODEL	0.7	—	0.6	—	ns
Carry-in from Fast Carry to Carry-out (CIN to O4)	CIN_O4DEL	1.4	—	1.2	—	ns
Carry-in from Fast Carry to PFU Out (CIN to F[3:0])	CIN_DEL	1.9	—	1.5	—	ns
Carry-in from General Routing to Carry-out (B4 to COUT)	B4_CODEL	0.7	—	0.6	—	ns
Carry-in from General Routing to Carry-out (B4 to O4)	B4_O4DEL	1.4	—	1.2	—	ns
Carry-in from General Routing to PFU Out (B4 to F[3:0])	B4_DEL	1.9	—	1.5	—	ns
Add/Subtract to Carry-out (A4 to COUT)	AS_CODEL	2.7	—	2.2	—	ns
Add/Subtract to Carry-out (A4 to O4)	AS_O4DEL	3.4	—	2.8	—	ns
Add/Subtract to PFU Out (A4 to F[3:0])	AS_DEL	3.6	—	2.9	—	ns

Notes: The new 4 x 1 multiplier and 4-bit comparator submodes use the appropriate ripple mode timing shown above.

EEPW .com.cn

Timing Characteristics (continued)

Table 35A. OR2CxxA and OR2TxxA Asynchronous Memory Read Characteristics (MA/MB Modes)

OR2CxxA Commercial: V_{DD} = 5.0 V ± 5%, 0 °C ≤ T_A ≤ 70 °C; OR2CxxA Industrial: V_{DD} = 5.0 V ± 10%, –40 °C ≤ T_A ≤ +85 °C.
OR2TxxA Commercial: V_{DD} = 3.0 V to 3.6 V, 0 °C ≤ T_A ≤ 70 °C; OR2TxxA Industrial: V_{DD} = 3.0 V to 3.6 V, –40 °C ≤ T_A ≤ +85 °C.

Parameter	Symbol	Speed												Unit
		-2		-3		-4		-5		-6		-7		
		Min	Max	Min	Max	Min	Max	Min	Max	Min	Max	Min	Max	
Read Operation (T_J = 85 °C, V_{DD} = min):														
Read Cycle Time	T_{RC}	5.1	—	3.6	—	2.7	—	2.4	—	2.3	—	2.0	—	ns
Data Valid after Address (A[3:0], B[3:0] to F[3:0])	MEM*_ADEL	—	4.0	—	2.8	—	2.1	—	1.7	—	1.4	—	1.3	ns
Read Operation, Clocking Data into Latch/Flip-flop (T_J = 85 °C, V_{DD} = min):														
Address to Clock Setup Time (A[3:0], B[3:0] to CK)	MEM*_ASET	2.4	—	1.8	—	1.2	—	1.1	—	1.0	—	1.0	—	ns
Clock to PFU Out (CK to Q[3:0])—Register	REG_DEL	—	2.4	—	2.0	—	1.9	—	1.5	—	1.3	—	1.0	ns

Note: Speed grades of -5, -6, and -7 are for OR2TxxA devices only.

Table 35B. OR2TxxB Asynchronous Memory Read Characteristics (MA/MB Modes)

OR2TxxB Commercial: V_{DD} = 3.0 V to 3.6 V, 0 °C ≤ T_A ≤ 70 °C; OR2TxxB Industrial: V_{DD} = 3.0 V to 3.6 V, –40 °C ≤ T_A ≤ +85 °C.

Parameter	Symbol	Speed				Unit
		-7		-8		
		Min	Max	Min	Max	
Read Operation (T_J = 85 °C, V_{DD} = min):						
Read Cycle Time	T_{RC}	1.9	—	1.8	—	ns
Data Valid after Address (A[3:0], B[3:0] to F[3:0])	MEM*_ADEL	—	1.3	—	1.0	ns
Read Operation, Clocking Data into Latch/Flip-flop (T_J = 85 °C, V_{DD} = min):						
Address to Clock Setup Time (A[3:0], B[3:0] to CK)	MEM*_ASET	0.9	—	0.8	—	ns
Clock to PFU Out (CK to Q[3:0])—Register	REG_DEL	—	1.0	—	1.0	ns

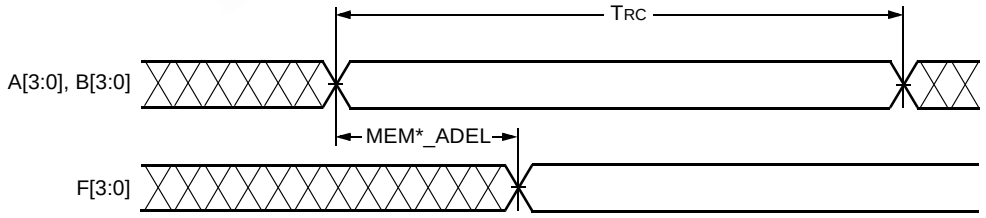

5-3226(F).r4

Figure 55. Read Operation—Flip-Flop Bypass

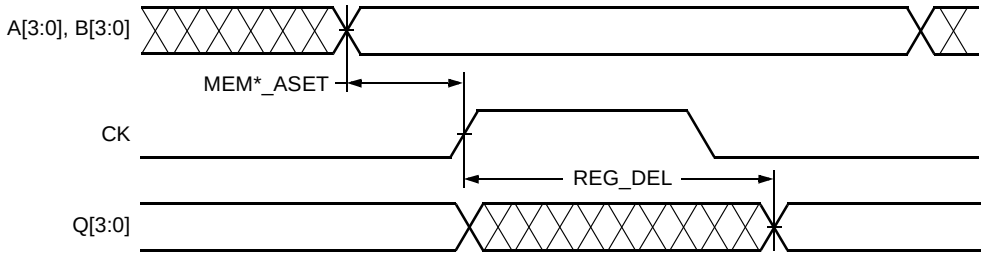

5-3227(F).r4

Figure 56. Read Operation—LUT Memory Loading Flip-Flops

Timing Characteristics (continued)

Table 36A. OR2CxxA and OR2TxxA Asynchronous Memory Write Characteristics (MA/MB Modes)

OR2CxxA Commercial: V_{DD} = 5.0 V ± 5%, 0 °C ≤ T_A ≤ 70 °C; OR2CxxA Industrial: V_{DD} = 5.0 V ± 10%, –40 °C ≤ T_A ≤ +85 °C. OR2TxxA Commercial: V_{DD} = 3.0 V to 3.6 V, 0 °C ≤ T_A ≤ 70 °C; OR2TxxA Industrial: V_{DD} = 3.0 V to 3.6 V, –40 °C ≤ T_A ≤ +85 °C.

Parameter	Symbol	Speed												Unit
		-2		-3		-4		-5		-6		-7		
		Min	Max	Min	Max	Min	Max	Min	Max	Min	Max	Min	Max	
Write Operation (TJ = 85 °C, VDD = min):														
Write Cycle Time	TWC	9.3	—	7.8	—	6.3	—	5.7	—	5.2	—	5.1	—	ns
Write Enable (WREN) Pulse Width (A4/B4)	TPW	3.0	—	2.5	—	2.0	—	1.8	—	1.7	—	1.6	—	ns
Setup Time (TJ = 85 °C, VDD = min):														
Address to WREN (A[3:0]/B[3:0] to A4/B4)	MEM*_AWRSET	0.1	—	0.1	—	0.0	—	0.0	—	0.0	—	0.0	—	ns
Data to WREN (WD[3:0] to A4/B4)	MEM*_DWRSET	0.0	—	0.0	—	0.0	—	0.0	—	0.0	—	0.0	—	ns
Address to WPE (A[3:0]/B[3:0] to C0)	MEM*_APWRSET	0.0	—	0.0	—	0.0	—	0.0	—	0.0	—	0.0	—	ns
Data to WPE (WD[3:0] to C0)	MEM*_DPWRSET	0.0	—	0.0	—	0.0	—	0.0	—	0.0	—	0.0	—	ns
WPE to WREN (C0 to A4/B4)	MEM*_WPESET	2.5	—	2.0	—	1.5	—	1.4	—	1.1	—	1.1	—	ns
Hold Time (TJ = all, VDD = all):														
Address from WREN (A[3:0]/B[3:0] from A4/B4)	MEM*_WRAHLD	2.4	—	1.7	—	1.8	—	1.6	—	1.6	—	1.5	—	ns
Data from WREN (WD[3:0] from A4/B4)	MEM*_WRDHLD	2.4	—	2.0	—	1.9	—	1.5	—	1.6	—	1.6	—	ns
Address from WPE (A[3:0/B[3:0] to C0)	MEM*_PWRAHLD	3.8	—	3.3	—	2.8	—	2.5	—	2.4	—	2.3	—	ns
Data from WPE (WD[3:0] to C0)	MEM*_PWRDHLD	3.9	—	3.4	—	2.9	—	2.6	—	2.4	—	2.3	—	ns
WPE from WREN (C0 from A4/B4)	MEM*_WPEHLD	0.0	—	0.0	—	0.0	—	0.0	—	0.0	—	0.0	—	ns

Note: Speed grades of -5, -6, and -7 are for OR2TxxA devices only.

Table 36B. OR2TxxB Asynchronous Memory Write Characteristics (MA/MB Modes)

OR2TxxB Commercial: V_{DD} = 3.0 V to 3.6 V, 0 °C ≤ T_A ≤ 70 °C; OR2TxxB Industrial: V_{DD} = 3.0 V to 3.6 V, –40 °C ≤ T_A ≤ +85 °C.

Parameter	Symbol	Speed				Unit
		-7		-8		
		Min	Max	Min	Max	
Write Operation (T_J = 85 °C, V_{DD} = min):						
Write Cycle Time	T_{WC}	5.1	—	4.2	—	ns
Write Enable (WREN) Pulse Width (A4/B4)	T_{PW}	1.7	—	1.4	—	ns
Setup Time (T_J = 85 °C, V_{DD} = min):						
Address to WREN (A[3:0]/B[3:0] to A4/B4)	MEM*_AWRSET	0.0	—	0.0	—	ns
Data to WREN (WD[3:0] to A4/B4)	MEM*_DWRSET	0.0	—	0.0	—	ns
Address to WPE (A[3:0]/B[3:0] to C0)	MEM*_APWRSET	0.0	—	0.0	—	ns
Data to WPE (WD[3:0] to C0)	MEM*_DPWRSET	0.0	—	0.0	—	ns
WPE to WREN (C0 to A4/B4)	MEM*_WPESET	1.0	—	0.8	—	ns
Hold Time (T_J = all, V_{DD} = all):						
Address from WREN (A[3:0]/B[3:0] from A4/B4)	MEM*_WRAHLD	0.9	—	0.7	—	ns
Data from WREN (WD[3:0] from A4/B4)	MEM*_WRDHLD	1.6	—	1.3	—	ns
Address from WPE (A[3:0/B[3:0] to C0)	MEM*_PWRAHLD	2.3	—	1.9	—	ns
Data from WPE (WD[3:0] to C0)	MEM*_PWRDHLD	2.3	—	1.9	—	ns
WPE from WREN (C0 from A4/B4)	MEM*_WPEHLD	0.0	—	0.0	—	ns

Timing Characteristics (continued)

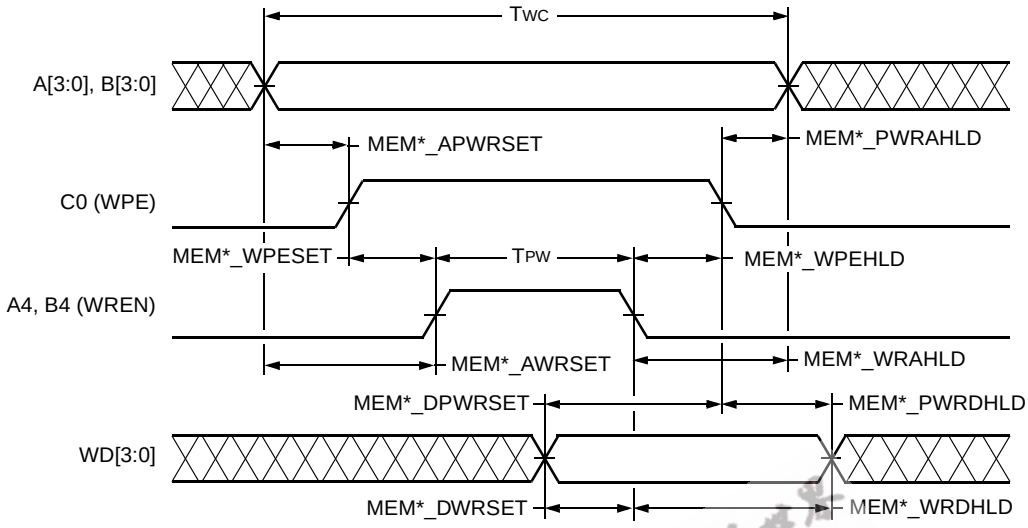

Figure 57. Write Operation

Timing Characteristics (continued)

Table 37A. OR2CxxA and OR2TxxA Asynchronous Memory Read During Write Operation (MA/MB Modes)

OR2CxxA Commercial: V_{DD} = 5.0 V ± 5%, 0 °C ≤ T_A ≤ 70 °C; OR2CxxA Industrial: V_{DD} = 5.0 V ± 10%, –40 °C ≤ T_A ≤ +85 °C. OR2TxxA Commercial: V_{DD} = 3.0 V to 3.6 V, 0 °C ≤ T_A ≤ 70 °C; OR2TxxA Industrial: V_{DD} = 3.0 V to 3.6 V, –40 °C ≤ T_A ≤ +85 °C.

Parameter	Symbol	Speed												Unit
		-2		-3		-4		-5		-6		-7		
		Min	Max	Min	Max	Min	Max	Min	Max	Min	Max	Min	Max	
Read During Write Operation (T_J = 85 °C, V_{DD} = min):														
Write Enable (WREN) to PFU Output Delay (A4/B4 to F[3:0])	MEM*_WRDEL	—	7.0	—	4.9	—	4.8	—	3.9	—	4.0	—	3.9	ns
Write-port Enable (WPE) to PFU Output Delay (C0 to F[3:0])	MEM*_PWRDEL	—	9.0	—	6.4	—	5.8	—	4.7	—	4.7	—	4.5	ns
Data to PFU Output Delay (WD[3:0] to F[3:0])	MEM*_DDEL	—	5.0	—	3.6	—	3.1	—	2.5	—	2.5	—	2.2	ns

Note: Speed grades of -5, -6, and -7 are for OR2TxxA devices only.

Table 37B. OR2TxxB Asynchronous Memory Read During Write Operation (MA/MB Modes)

OR2TxxB Commercial: V_{DD} = 3.0 V to 3.6 V, 0 °C ≤ T_A ≤ 70 °C; OR2TxxB Industrial: V_{DD} = 3.0 V to 3.6 V, –40 °C ≤ T_A ≤ +85 °C.

Parameter	Symbol	Speed				Unit
		-7		-8		
		Min	Max	Min	Max	
Read During Write Operation (T_J = +85 °C, V_{DD} = min):						
Write Enable (WREN) to PFU Output Delay (A4/B4 to F[3:0])	MEM*_WRDEL	—	4.5	—	3.9	ns
Write-port Enable (WPE) to PFU Output Delay (C0 to F[3:0])	MEM*_PWRDEL	—	4.6	—	4.0	ns
Data to PFU Output Delay (WD[3:0] to F[3:0])	MEM*_DDEL	—	2.7	—	2.4	ns

EEPW .com.cn

Timing Characteristics (continued)

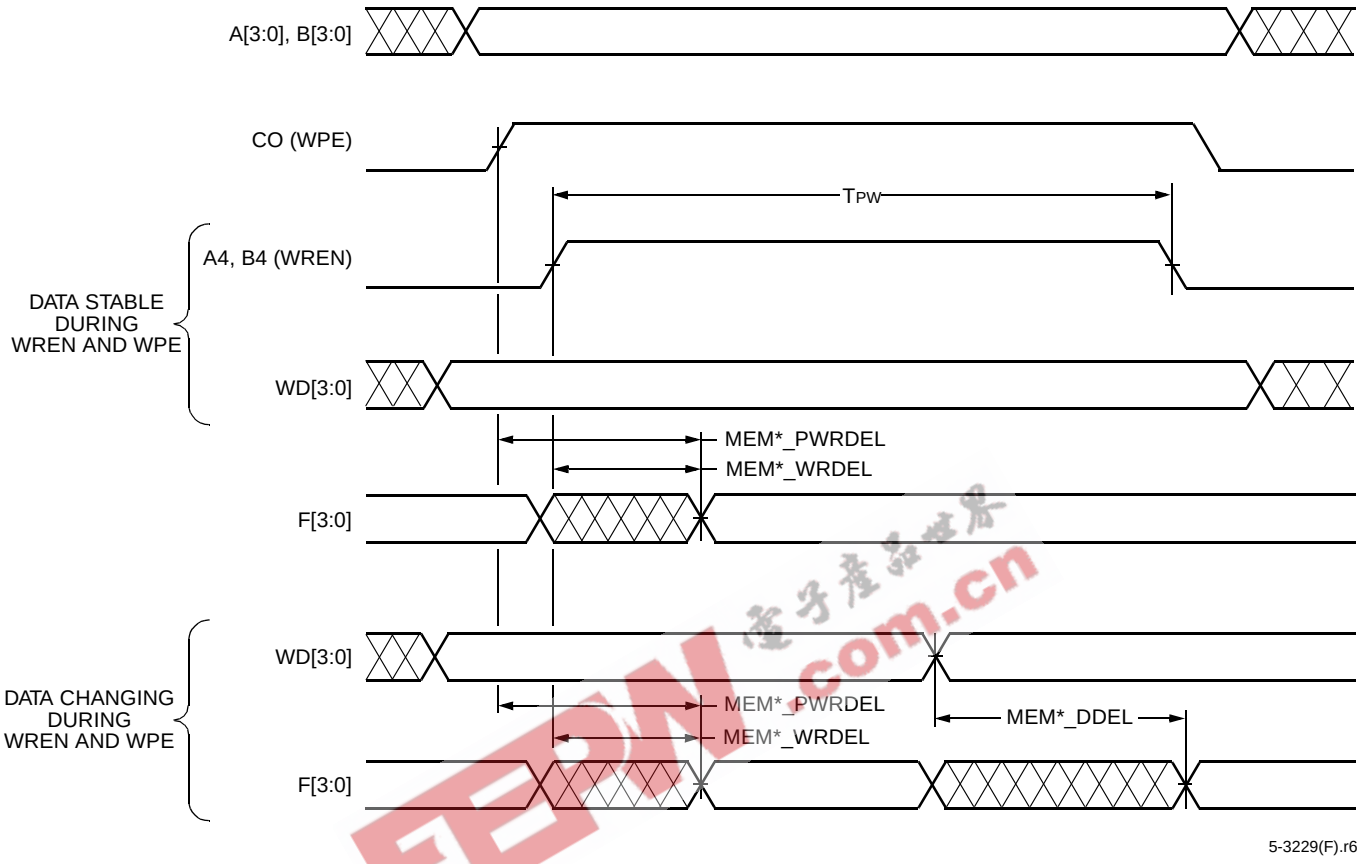

Figure 58. Read During Write

Timing Characteristics (continued)

Table 38A. OR2CxxA and OR2TxxA Asynchronous Memory Read During Write, Clocking Data into Latch/ Flip-Flop (MA/MB Modes)

OR2CxxA Commercial: V_{DD} = 5.0 V ± 5%, 0 °C ≤ T_A ≤ 70 °C; OR2CxxA Industrial: V_{DD} = 5.0 V ± 10%, –40 °C ≤ T_A ≤ +85 °C. OR2TxxA Commercial: V_{DD} = 3.0 V to 3.6 V, 0 °C ≤ T_A ≤ 70 °C; OR2TxxA Industrial: V_{DD} = 3.0 V to 3.6 V, –40 °C ≤ T_A ≤ +85 °C.

Parameter	Symbol	Speed												Unit
		-2		-3		-4		-5		-6		-7		
		Min	Max	Min	Max	Min	Max	Min	Max	Min	Max	Min	Max	
Setup Time (T_J = 85 °C, V_{DD} = min):														
Address to Clock (A[3:0], B[3:0] to CK)	MEM*_ASET	2.4	—	1.8	—	1.2	—	1.1	—	1.0	—	1.0	—	ns
Write Enable (WREN) to Clock (A4/B4 to CK)	MEM*_WRSET	5.4	—	4.4	—	3.8	—	3.4	—	3.1	—	3.0	—	ns
Write-port Enable (WPE) to Clock (C0 to CK)	MEM*_PWRSET	7.4	—	5.9	—	4.8	—	4.3	—	4.0	—	3.9	—	ns
Data (WD[3:0] to CK)	MEM*_DSET	3.5	—	2.6	—	2.6	—	2.3	—	2.2	—	2.1	—	ns
Hold Time (T_J = All, V_{DD} = All): All	TH	0.0	—	0.0	—	0.0	—	0.0	—	0.0	—	0.0	—	ns
Clock to PFU Out (CK to Q[3:0])—Register	REG_DEL	—	2.4	—	2.0	—	1.9	—	1.5	—	1.3	—	1.0	ns

Note: Speed grades of -5, -6, and -7 are for OR2TxxA devices only.

Table 38B. OR2TxxB Asynchronous Memory Read During Write, Clocking Data into Latch/Flip-Flop (MA/MB Modes)

OR2TxxB Commercial: V_{DD} = 3.0 V to 3.6 V, 0 °C ≤ T_A ≤ 70 °C; OR2TxxB Industrial: V_{DD} = 3.0 V to 3.6 V, –40 °C ≤ T_A ≤ +85 °C.

Parameter	Symbol	Speed				Unit
		-7		-8		
		Min	Max	Min	Max	
Setup Time (T_J = 85 °C, V_{DD} = min):						
Address to Clock (A[3:0], B[3:0] to CK)	MEM*_ASET	0.9	—	0.8	—	ns
Write Enable (WREN) to Clock (A4/B4 to CK)	MEM*_WRSET	2.9	—	2.5	—	ns
Write-port Enable (WPE) to Clock (C0 to CK)	MEM*_PWRSET	3.7	—	3.2	—	ns
Data (WD[3:0] to CK)	MEM*_DSET	2.0	—	1.7	—	ns
Hold Time (T_J = all, V_{DD} = all): All	TH	0.0	—	0.0	—	ns
Clock to PFU Out (CK to Q[3:0])—Register	REG_DEL	—	1.0	—	1.0	ns

Timing Characteristics (continued)

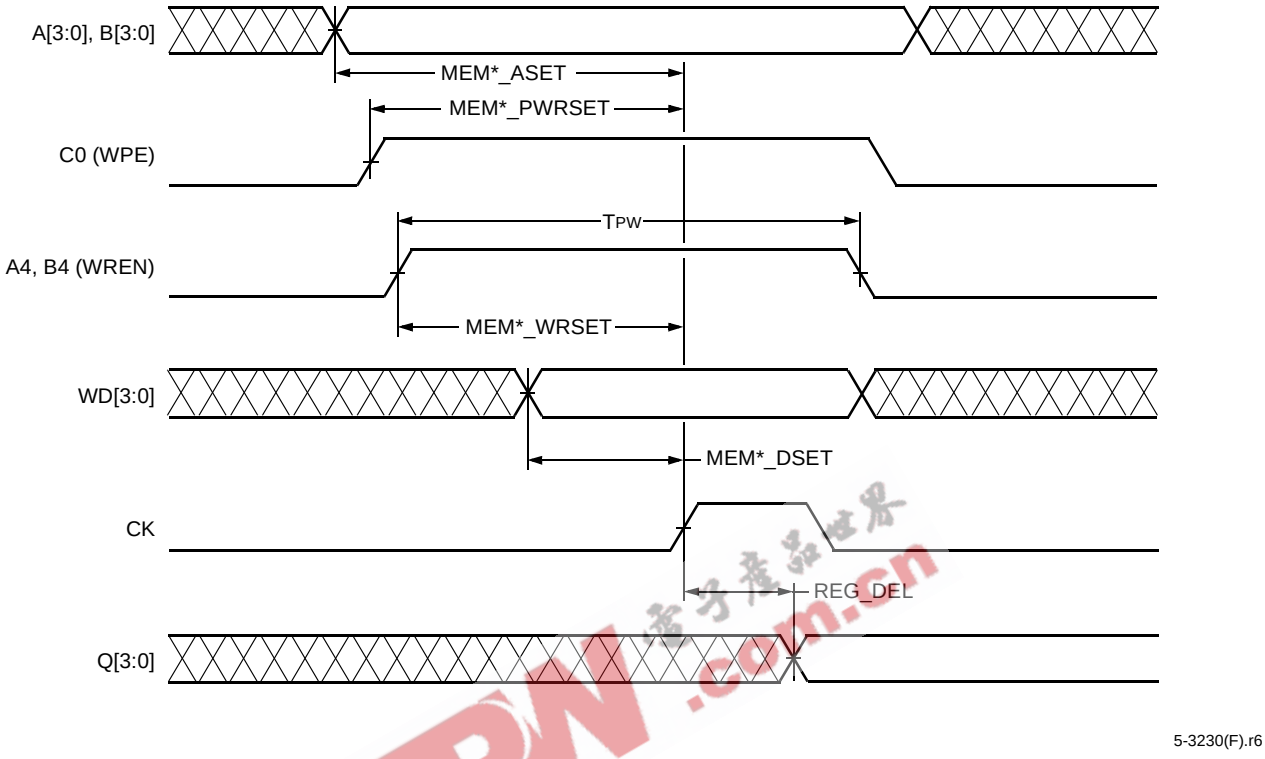

Figure 59. Read During Write—Clocking Data into Flip-Flop

Timing Characteristics (continued)

Table 39A. OR2CxxA and OR2TxxA Synchronous Memory Write Characteristics (SSPM and SDPM Modes)

OR2CxxA Commercial: V_{DD} = 5.0 V ± 5%, 0 °C ≤ T_A ≤ 70 °C; OR2CxxA Industrial: V_{DD} = 5.0 V ± 10%, –40 °C ≤ T_A ≤ +85 °C. OR2TxxA Commercial: V_{DD} = 3.0 V to 3.6 V, 0 °C ≤ T_A ≤ 70 °C; OR2TxxA Industrial: V_{DD} = 3.0 V to 3.6 V, –40 °C ≤ T_A ≤ +85 °C.

Parameter	Symbol	Speed												Unit
		-2		-3		-4		-5		-6		-7		
		Min	Max	Min	Max	Min	Max	Min	Max	Min	Max	Min	Max	
Write Operation for Fast-RAM Mode[1]:														
Maximum Frequency	FFSCK	38.2	—	52.6	—	83.3	—	90.9	—	92.6	—	96.2	—	MHz
Clock Low Time	TFSCL	13.1	—	9.5	—	6.0	—	5.5	—	5.4	—	5.2	—	ns
Clock High Time	TFSCH	13.1	—	9.5	—	6.0	—	5.5	—	5.4	—	5.2	—	ns
Clock to Data Valid (CK to F[3:0])[2]	FMEMS_DEL	—	9.0	—	7.4	—	6.2	—	5.0	—	5.3	—	5.2	ns
Write Operation for Normal RAM Mode:														
Maximum Frequency	FSCK	24.3	—	33.3	—	52.6	—	58.0	—	58.8	—	59.8	—	MHz
Clock Low Time	TSCL	20.6	—	15.0	—	9.5	—	8.5	—	8.5	—	8.4	—	ns
Clock High Time	TSCH	20.6	—	15.0	—	9.5	—	8.5	—	8.5	—	8.4	—	ns
Clock to Data Valid (CK to F[3:0])	MEMS_DEL	—	10.9	—	8.6	—	7.5	—	6.0	—	6.4	—	5.9	ns
Write Operation Setup Time:														
Address to Clock (A[3:0]/B[3:0] to CK)	MEMS_ASET	0.0	—	0.0	—	0.0	—	0.0	—	0.0	—	0.0	—	ns
Data to Clock (WD[3:0] to CK)	MEMS_DSET	0.0	—	0.0	—	0.0	—	0.0	—	0.0	—	0.0	—	ns
Write Enable (WREN) to Clock (A4 to CK)	MEMS_WRSET	0.0	—	0.0	—	0.0	—	0.0	—	0.0	—	0.0	—	ns
Write-port Enable (WPE) to Clock (C0 to CK)	MEMS_PWRSET	0.0	—	0.0	—	0.0	—	0.0	—	0.0	—	0.0	—	ns
Write Operation Hold Time:														
Address to Clock (A[3:0]/B[3:0] to CK)	MEMS_AHLD	3.8	—	3.0	—	2.2	—	2.0	—	1.9	—	1.8	—	ns
Data to Clock (WD[3:0] to CK)	MEMS_DHLD	3.8	—	3.0	—	2.2	—	2.0	—	1.9	—	1.8	—	ns
Write Enable (WREN) to Clock (A4 to CK)	MEMS_WRHLD	3.8	—	3.0	—	2.2	—	2.0	—	1.9	—	1.8	—	ns
Write-port Enable (WPE) to Clock (C0 to CK)	MEMS_PWRHLD	3.3	—	2.3	—	1.5	—	1.4	—	1.9	—	1.2	—	ns

1. Readback of the configuration bit stream when simultaneously writing to a PFU in either SSPM fast mode or SDPM fast mode is not allowed.
2. Because the setup time of data into the latches/FFs is less than 0 ns, data written into the RAM can be loaded into a latch/FF in the same PFU on the next opposite clock edge (one-half clock period).

Note: Speed grades of -5, -6, and -7 are for OR2TxxA devices only.

Table 39.B OR2TxxB Synchronous Memory Write Characteristics (SSPM and SDPM Modes)

OR2TxxB Commercial: V_{DD} = 3.0 V to 3.6 V, 0 °C ≤ T_A ≤ 70 °C; OR2TxxB Industrial: V_{DD} = 3.0 V to 3.6 V, –40 °C ≤ T_A ≤ +85 °C.

Parameter	Symbol	Speed				Unit
		-7		-8		
		Min	Max	Min	Max	
Write Operation for Fast-RAM Mode[1]:						
Maximum Frequency	FFSCK	97.7	—	112.4	—	MHz
Clock Low Time	TFSCL	5.1	—	4.5	—	ns
Clock High Time	TFSCH	5.1	—	4.5	—	ns
Clock to Data Valid (CK to F[3:0])[2]	FMEMS_DEL	—	5.1	—	4.5	ns
Write Operation for Normal RAM Mode:						
Maximum Frequency	FSCK	60.8	—	69.9	—	MHz
Clock Low Time	TSCL	8.2	—	7.2	—	ns
Clock High Time	TSCH	8.2	—	7.2	—	ns
Clock to Data Valid (CK to F[3:0])	MEMS_DEL	—	5.1	—	4.5	ns

Timing Characteristics (continued)

Table 39.B OR2TxxB Synchronous Memory Write Characteristics (SSPM and SDPM Modes) (continued)

OR2TxxB Commercial: V_{DD} = 3.0 V to 3.6 V, 0 °C ≤ T_A ≤ 70 °C; OR2TxxB Industrial: V_{DD} = 3.0 V to 3.6 V, –40 °C ≤ T_A ≤ +85 °C.

Parameter	Symbol	Speed				Unit
		-7		-8		
		Min	Max	Min	Max	
Write Operation Setup Time:						
Address to Clock (A[3:0]/B[3:0] to CK)	MEMS_ASET	0.0	—	0.0	—	ns
Data to Clock (WD[3:0] to CK)	MEMS_DSET	0.0	—	0.0	—	ns
Write Enable (WREN) to Clock (A4 to CK)	MEMS_WRSET	0.0	—	0.0	—	ns
Write-port Enable (WPE) to Clock (C0 to CK)	MEMS_PWRSET	0.0	—	0.0	—	ns
Write Operation Hold Time:						
Address to Clock (A[3:0]/B[3:0] to CK)	MEMS_AHLD	1.0	—	0.8	—	ns
Data to Clock (WD[3:0] to CK)	MEMS_DHLD	1.0	—	0.8	—	ns
Write Enable (WREN) to Clock (A4 to CK)	MEMS_WRHLD	1.0	—	0.8	—	ns
Write-port Enable (WPE) to Clock (C0 to CK)	MEMS_PWRHLD	0.7	—	0.6	—	ns

1. Readback of the configuration bit stream when simultaneously writing to a PFU in either SSPM fast mode or SDPM fast mode is not allowed.
2. Because the setup time of data into the latches/FFs is less than 0 ns, data written into the RAM can be loaded into a latch/FF in the same PFU on the next opposite clock edge (one-half clock period).

Note: Speed grades of -5, -6, and -7 are for OR2TxxA devices only.

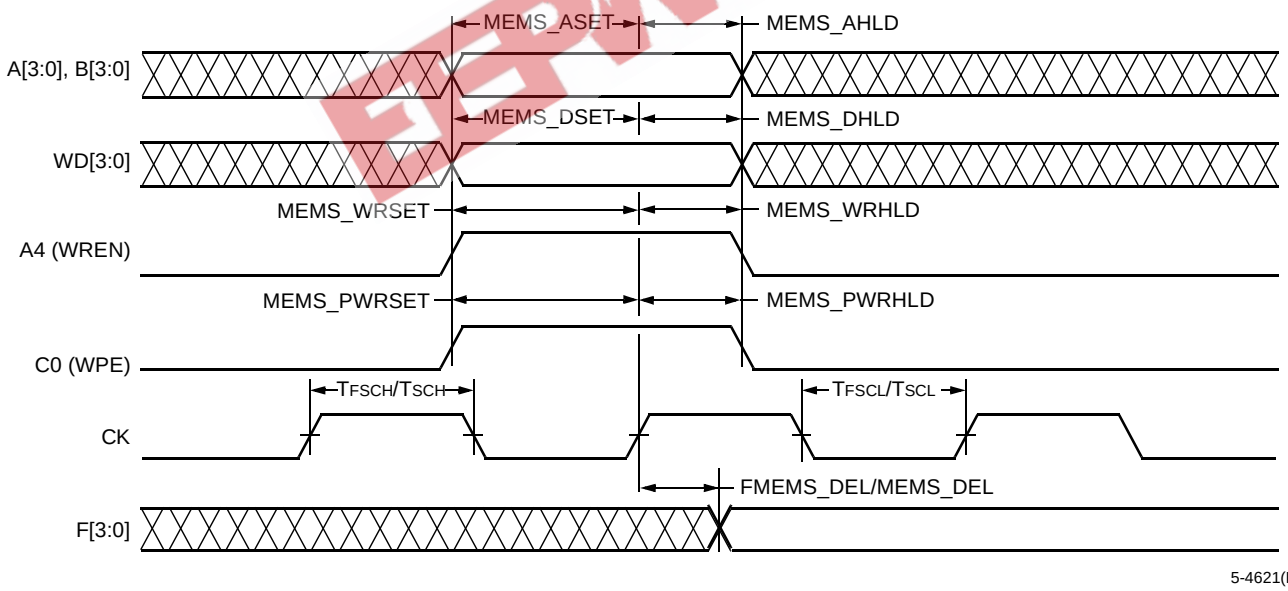

5-4621(F).a

Figure 60. Synchronous Memory Write Characteristics

Timing Characteristics (continued)

Table 40A. OR2CxxA and OR2TxxA Synchronous Memory Read Characteristics (SSPM and SDPM Modes)

OR2CxxA Commercial: V_{DD} = 5.0 V ± 5%, 0 °C ≤ T_A ≤ 70 °C; OR2CxxA Industrial: V_{DD} = 5.0 V ± 10%, –40 °C ≤ T_A ≤ +85 °C. OR2TxxA Commercial: V_{DD} = 3.0 V to 3.6 V, 0 °C ≤ T_A ≤ 70 °C; OR2TxxA Industrial: V_{DD} = 3.0 V to 3.6 V, –40 °C ≤ T_A ≤ +85 °C.

Parameter	Symbol	Speed												Unit
		-2		-3		-4		-5		-6		-7		
		Min	Max	Min	Max	Min	Max	Min	Max	Min	Max	Min	Max	
Read Operation (T_J = 85 °C, V_{DD} = min):														
Read Cycle Time	T_{RC}	5.1	—	3.6	—	2.7	—	2.4	—	2.3	—	2.0	—	ns
Data Valid After Address (A[3:0], B[3:0] to F[3:0])	MEMS*_ADEL	—	4.0	—	2.8	—	2.1	—	1.7	—	1.4	—	1.1	ns
Read Operation, Clocking Data Into Latch/FF (T_J = 85 °C, V_{DD} = min):														
Address to Clock Setup Time (A[3:0], B[3:0] to CK)	MEMS*_ASET	2.4	—	1.8	—	1.2	—	1.1	—	1.0	—	0.9	—	ns
Clock to PFU Output—Register (CK to Q[3:0])	REG_DEL	—	2.4	—	2.0	—	1.9	—	1.5	—	1.3	—	1.0	ns

Note: Speed grades of -5, -6, and -7 are for OR2TxxA devices only.

Table 40B. OR2TxxB Synchronous Memory Read Characteristics (SSPM and SDPM Modes)

OR2TxxB Commercial: V_{DD} = 3.0 V to 3.6 V, 0 °C ≤ T_A ≤ 70 °C; OR2TxxB Industrial: V_{DD} = 3.0 V to 3.6 V, –40 °C ≤ T_A ≤ +85 °C.

Parameter	Symbol	Speed				Unit
		-7		-8		
		Min	Max	Min	Max	
Read Operation (T_J = 85 °C, V_{DD} = min):						
Read Cycle Time	T_{RC}	1.9	—	1.8	—	ns
Data Valid After Address (A[3:0], B[3:0] to F[3:0])	MEMS*_ADEL	—	1.8	—	1.4	ns
Read Operation, Clocking Data into Latch/FF (T_J = 85 °C, V_{DD} = Min):						
Address to Clock Setup Time (A[3:0], B[3:0] to CK)	MEMS*_ASET	0.9	—	0.8	—	ns
Clock to PFU Output—Register (CK to Q[3:0])	REG_DEL	—	1.0	—	1.0	ns

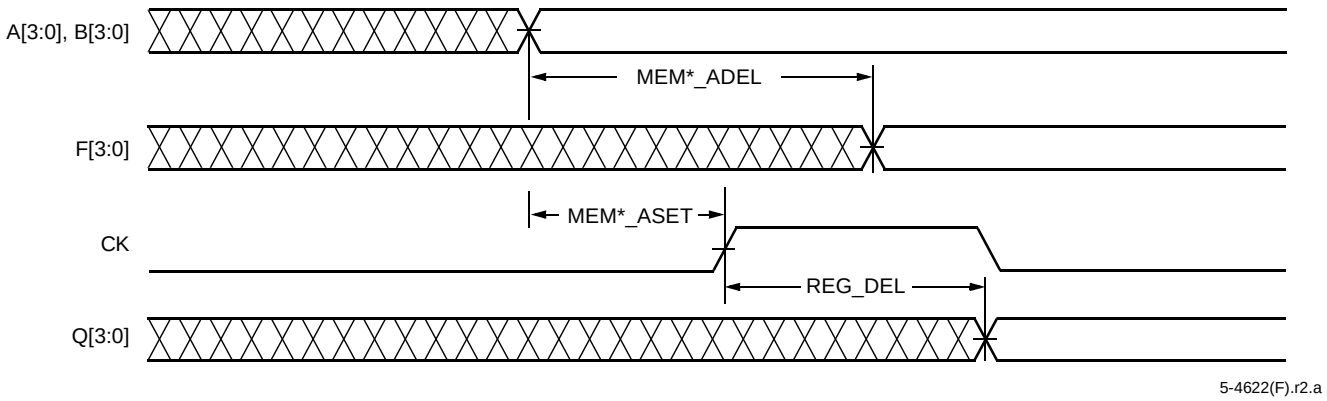

Figure 61. Synchronous Memory Read Cycle

Timing Characteristics (continued)

Table 41A. OR2CxxA and OR2TxxA PFU Output MUX, PLC BIDI, and Direct Routing Timing Characteristics

OR2CxxA Commercial: V_{DD} = 5.0 V ± 5%, 0 °C ≤ T_A ≤ 70 °C; OR2CxxA Industrial: V_{DD} = 5.0 V ± 10%, –40 °C ≤ T_A ≤ +85 °C.
OR2TxxA Commercial: V_{DD} = 3.0 V to 3.6 V, 0 °C ≤ T_A ≤ 70 °C; OR2TxxA Industrial: V_{DD} = 3.0 V to 3.6 V, –40 °C ≤ T_A ≤ +85 °C.

Parameter	Symbol	Speed												Unit
		-2		-3		-4		-5		-6		-7		
		Min	Max	Min	Max	Min	Max	Min	Max	Min	Max	Min	Max	
PFU Output MUX (T_J = 85 °C, V_{DD} = min)														
Output MUX Delay (F[3:0]/Q[3:0] to O[4:0])	OMUX_DEL	—	1.1	—	0.8	—	0.6	—	0.5	—	0.4	—	0.4	ns
PLC 3-Statable BIDIs (T_J = 85 °C, V_{DD} = min)														
BIDI Propagation Delay	TRI_DEL	—	1.2	—	1.0	—	0.8	—	0.7	—	0.6	—	0.5	ns
BIDI 3-state Enable/Disable Delay	TRIEN_DEL	—	1.7	—	1.3	—	1.0	—	0.8	—	0.8	—	0.7	ns
Direct Routing (T_J = 85 °C, V_{DD} = min)														
PFU to PFU Delay (xSW)	DIR_DEL	—	1.4	—	1.1	—	0.9	—	0.7	—	0.6	—	0.6	ns
PFU Feedback (xSW)	FDBK_DEL	—	1.0	—	0.8	—	0.7	—	0.6	—	0.5	—	0.5	ns

Note: Speed grades of -5, -6, and -7 are for OR2TxxA devices only.

Table 41B. OR2TxxB PFU Output MUX, PLC BIDI, and Direct Routing Timing Characteristics

OR2TxxB Commercial: V_{DD} = 3.0 V to 3.6 V, 0 °C ≤ T_A ≤ 70 °C; OR2TxxA Industrial: V_{DD} = 3.0 V to 3.6 V, –40 °C ≤ T_A ≤ +85 °C.

Parameter	Symbol	Speed				Unit
		-7		-8		
		Min	Max	Min	Max	
PFU Output MUX (T_J = 85 °C, V_{DD} = min)						
Output MUX Delay (F[3:0]/Q[3:0] to O[4:0])	OMUX_DEL	—	0.4	—	0.4	ns
PLC 3-Statable BIDIs (T_J = 85 °C, V_{DD} = min)						
BIDI Propagation Delay	TRI_DEL	—	0.7	—	0.6	ns
BIDI 3-state Enable/Disable Delay	TRIEN_DEL	—	1.1	—	0.9	ns
Direct Routing (T_J = 85 °C, V_{DD} = min)						
PFU to PFU Delay (xSW)	DIR_DEL	—	0.6	—	0.5	ns
PFU Feedback (xSW)	FDBK_DEL	—	0.4	—	0.4	ns

EEPW .com.cn

Timing Characteristics (continued)

Table 42A. OR2CxxA and OR2TxxA Internal Clock Delay

OR2CxxA Commercial: V_{DD} = 5.0 V ± 5%, 0 °C ≤ T_A ≤ 70 °C; OR2CxxA Industrial: V_{DD} = 5.0 V ± 10%, –40 °C ≤ T_A ≤ +85 °C. OR2TxxA Commercial: V_{DD} = 3.0 V to 3.6 V, 0 °C ≤ T_A ≤ 70 °C; OR2TxxA Industrial: V_{DD} = 3.0 V to 3.6 V, –40 °C ≤ T_A ≤ +85 °C.

Device (T_J = 85 °C, V_{DD} = min)	Symbol	Speed												Unit
		-2		-3		-4		-5		-6		-7		
		Min	Max	Min	Max	Min	Max	Min	Max	Min	Max	Min	Max	
OR2C04A/OR2T04A	CLK_DEL	—	4.6	—	4.4	—	4.3	—	3.6	—	—	—	—	ns
OR2C06A/OR2T06A	CLK_DEL	—	4.7	—	4.5	—	4.4	—	3.7	—	—	—	—	ns
OR2C08A/OR2T08A	CLK_DEL	—	4.8	—	4.6	—	4.5	—	3.8	—	—	—	—	ns
OR2C10A/OR2T10A	CLK_DEL	—	4.9	—	4.7	—	4.6	—	3.9	—	—	—	—	ns
OR2C12A/OR2T12A	CLK_DEL	—	5.0	—	4.8	—	4.7	—	4.0	—	—	—	—	ns
OR2C15A/OR2T15A	CLK_DEL	—	5.1	—	4.9	—	4.8	—	4.1	—	3.9	—	3.3	ns
OR2C26A/OR2T26A	CLK_DEL	—	5.2	—	5.1	—	5.0	—	4.2	—	4.0	—	3.4	ns
OR2C40A/OR2T40A	CLK_DEL	—	5.6	—	5.4	—	5.3	—	4.5	—	4.2	—	3.6	ns

Notes:
This clock delay is for a fully routed clock tree that uses the primary clock network. It includes both the input buffer delay and the clock routing to the PFU CLK input. The delay will be reduced if any of the clock branches are not used.

Speed grades of -5, -6, and -7 are for OR2TxxA devices only.

Table 42B. OR2TxxB Internal Clock Delay

OR2TxxB Commercial: V_{DD} = 3.0 V to 3.6 V, 0 °C ≤ T_A ≤ 70 °C; OR2TxxB Industrial: V_{DD} = 3.0 V to 3.6 V, –40 °C ≤ T_A ≤ +85 °C.

Device (T_J = 85 °C, V_{DD} = min)	Symbol	Speed				Unit
		-7		-8		
		Min	Max	Min	Max	
OR2T15B	CLK_DEL	—	3.6	—	3.1	ns
OR2T40B	CLK_DEL	—	3.8	—	3.3	ns

Note: This clock delay is for a fully routed clock tree that uses the primary clock network. It includes both the input buffer delay and the clock routing to the PFU CLK input. The delay will be reduced if any of the clock branches are not used.

Timing Characteristics (continued)

Table 43A. OR2CxxA and OR2TxxA OR2CxxA/OR2TxxA Global Clock to Output Delay (Pin-to-Pin)—Output on Same Side of the Device as the Clock Pin

OR2CxxA Commercial: V_{DD} = 5.0 V ± 5%, 0 °C ≤ T_A ≤ 70 °C; Industrial: V_{DD} = 5.0 V ± 10%, –40 °C ≤ T_A ≤ +85 °C; C_L = 50 pF.
OR2TxxA Commercial: V_{DD} = 3.0 V to 3.6 V, 0 °C ≤ T_A ≤ 70 °C; Industrial: V_{DD} = 3.0 V to 3.6 V, –40 °C ≤ T_A ≤ +85 °C; C_L = 50 pF.

Description (T_J = 85 °C, V_{DD} = min)	Device	Speed												Unit
		-2		-3		-4		-5		-6		-7		
		Min	Max	Min	Max	Min	Max	Min	Max	Min	Max	Min	Max	
CLK Input Pin → OUTPUT Pin (Fast)	OR2C/2T04A	—	11.7	—	10.3	—	9.8	—	8.6	—	—	—	—	ns
	OR2C/2T06A	—	11.8	—	10.4	—	9.9	—	8.7	—	—	—	—	ns
	OR2C/2T08A	—	11.9	—	10.5	—	10.0	—	8.8	—	—	—	—	ns
	OR2C/2T10A	—	12.0	—	10.6	—	10.1	—	8.9	—	—	—	—	ns
	OR2C/2T12A	—	12.1	—	10.7	—	10.2	—	9.0	—	—	—	—	ns
	OR2C/2T15A	—	12.2	—	10.8	—	10.3	—	9.1	—	8.3	—	6.7	ns
	OR2C/2T26A	—	12.3	—	11.0	—	10.5	—	9.2	—	8.4	—	6.9	ns
	OR2C/2T40A	—	12.7	—	11.4	—	10.8	—	9.5	—	8.6	—	7.0	ns
CLK Input Pin → OUTPUT Pin (Slewlim)	OR2C/2T04A	—	13.9	—	12.5	—	11.7	—	10.0	—	—	—	—	ns
	OR2C/2T06A	—	14.0	—	12.6	—	11.8	—	10.1	—	—	—	—	ns
	OR2C/2T08A	—	14.1	—	12.7	—	11.9	—	10.2	—	—	—	—	ns
	OR2C/2T10A	—	14.2	—	12.8	—	12.0	—	10.3	—	—	—	—	ns
	OR2C/2T12A	—	14.3	—	12.9	—	12.1	—	10.4	—	—	—	—	ns
	OR2C/2T15A	—	14.4	—	13.0	—	12.2	—	10.5	—	9.5	—	7.4	ns
	OR2C/2T26A	—	14.5	—	13.2	—	12.3	—	10.6	—	9.6	—	7.5	ns
	OR2C/2T40A	—	14.9	—	13.6	—	12.6	—	10.9	—	9.8	—	7.7	ns
CLK Input Pin → OUTPUT Pin (Sinklim)	OR2C/2T04A	—	15.7	—	14.7	—	13.7	—	13.1	—	—	—	—	ns
	OR2C/2T06A	—	15.8	—	14.8	—	13.8	—	13.2	—	—	—	—	ns
	OR2C/2T08A	—	15.9	—	14.9	—	13.9	—	13.3	—	—	—	—	ns
	OR2C/2T10A	—	16.0	—	15.0	—	14.0	—	13.4	—	—	—	—	ns
	OR2C/2T12A	—	16.1	—	15.1	—	14.1	—	13.5	—	—	—	—	ns
	OR2C/2T15A	—	16.2	—	15.2	—	14.2	—	13.6	—	12.1	—	10.0	ns
	OR2C/2T26A	—	16.3	—	15.3	—	14.3	—	13.7	—	12.2	—	10.7	ns
	OR2C/2T40A	—	16.7	—	15.7	—	14.6	—	14.0	—	12.4	—	10.9	ns

Notes:
The pin-to-pin timing information from *ORCA* Foundry version 9.2 and later is more accurate than this table. For earlier versions of *ORCA* Foundry, the pin-to-pin timing parameters in this table should be used instead of results reported by *ORCA* Foundry.

This clock delay is for a fully routed clock tree that uses the primary clock network. It includes both the input buffer delay, the clock routing to the PFU CLK input, the clock→Q of the FF, and the delay through the output buffer. The delay will be reduced if any of the clock branches are not used. The given timing requires that the input clock pin be located at one of the four center PICs on any side of the device and that the direct FF→I/O routing be used.

If the clock pin is not located at one of the four center PICs, this delay must be increased by up to the following amounts: OR2C/2T04A = 1.5%, OR2C/2T06A = 2.0%, OR2C/2T08A = 3.1%, OR2C/2T10A = 3.9%, OR2C/2T12A = 4.9%, OR2C/2T15A = 5.7%, OR2C/2T26A = 8.1%, OR2C/2T40A = 12.5%.

Speed grades of -5, -6, and -7 are for OR2TxxA devices only.

Timing Characteristics (continued)

Table 43B. OR2TxxB Global Clock to Output Delay (Pin-to-Pin)—Output on Same Side of the Device as the Clock Pin

OR2TxxB Commercial: V_{DD} = 3.0 V to 3.6 V, 0 °C ≤ T_A ≤ 70 °C;
Industrial: V_{DD} = 3.0 V to 3.6 V, –40 °C ≤ T_A ≤ +85 °C; C_L = 50 pF.

Description (T_J = 85 °C, V_{DD} = min)	Device	Speed				Unit
		-7		-8		
		Min	Max	Min	Max	
CLK Input Pin → OUTPUT Pin (Fast)	OR2T15B OR2T40B	— —	7.3 7.5	— —	6.6 6.6	ns ns
CLK Input Pin → OUTPUT Pin (Slewlim)	OR2T15B OR2T40B	— —	8.2 8.4	— —	7.4 7.6	ns ns
CLK Input Pin → OUTPUT Pin (Sinklim)	OR2T15B OR2T40B	— —	12.9 13.1	— —	12.1 12.3	ns ns

Notes:
The pin-to-pin timing information from *ORCA* Foundry version 9.2 and later is more accurate than this table. For earlier versions of *ORCA* Foundry, the pin-to-pin timing parameters in this table should be used instead of results reported by *ORCA* Foundry.

This clock delay is for a fully routed clock tree that uses the primary clock network. It includes both the input buffer delay, the clock routing to the PFU CLK input, the clock→Q of the FF, and the delay through the output buffer. The delay will be reduced if any of the clock branches are not used. The given timing requires that the input clock pin be located at one of the four center PICs on any side of the device and that the direct FF→I/O routing be used.

If the clock pin is not located at one of the four center PICs, this delay must be increased by up to the following amounts: OR2T15B = 5.7%, OR2T40B = 12.5%.

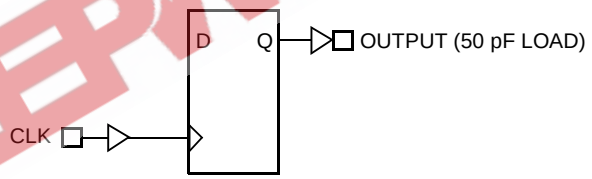

5-4846(F)

Figure 62. Global Clock to Output Delay

Timing Characteristics (continued)

Table 44A. OR2CxxA/OR2TxxA Global Clock to Output Delay (Pin-to-Pin)—Output Not on Same Side of the Device as the Clock Pin

OR2CxxA Commercial: V_{DD} = 5.0 V ± 5%, 0 °C ≤ T_A ≤ 70 °C; Industrial: V_{DD} = 5.0 V ± 10%, –40 °C ≤ T_A ≤ +85 °C; C_L = 50 pF.
OR2TxxA Commercial: V_{DD} = 3.0 V to 3.6 V, 0 °C ≤ T_A ≤ 70 °C;
Industrial: V_{DD} = 3.0 V to 3.6 V, –40 °C ≤ T_A ≤ +85 °C; C_L = 50 pF.

Description (T_J = 85 °C, V_{DD} = min)	Device	Speed												Unit
		-2		-3		-4		-5		-6		-7		
		Min	Max	Min	Max	Min	Max	Min	Max	Min	Max	Min	Max	
CLK Input Pin → OUTPUT Pin (Fast)	OR2C/2T04A	—	11.8	—	10.5	—	9.9	—	8.8	—	—	—	—	ns
	OR2C/2T06A	—	12.0	—	10.6	—	10.0	—	8.9	—	—	—	—	ns
	OR2C/2T08A	—	12.2	—	10.8	—	10.1	—	9.0	—	—	—	—	ns
	OR2C/2T10A	—	12.4	—	11.0	—	10.3	—	9.2	—	—	—	—	ns
	OR2C/2T12A	—	12.6	—	11.2	—	10.5	—	9.4	—	—	—	—	ns
	OR2C/2T15A	—	12.8	—	11.5	—	10.7	—	9.6	—	8.9	—	7.3	ns
	OR2C/2T26A	—	13.1	—	11.9	—	11.1	—	10.0	—	9.3	—	7.7	ns
	OR2C/2T40A	—	14.4	—	13.3	—	12.4	—	11.1	—	10.5	—	8.3	ns
CLK Input Pin → OUTPUT Pin (Slewlim)	OR2C/2T04A	—	14.1	—	12.7	—	11.8	—	10.3	—	—	—	—	ns
	OR2C/2T06A	—	14.3	—	12.9	—	11.9	—	10.4	—	—	—	—	ns
	OR2C/2T08A	—	14.4	—	13.1	—	12.0	—	10.5	—	—	—	—	ns
	OR2C/2T10A	—	14.6	—	13.3	—	12.2	—	10.6	—	—	—	—	ns
	OR2C/2T12A	—	14.8	—	13.5	—	12.4	—	10.8	—	—	—	—	ns
	OR2C/2T15A	—	15.0	—	13.6	—	12.6	—	11.0	—	10.1	—	8.0	ns
	OR2C/2T26A	—	15.3	—	14.1	—	12.9	—	11.4	—	10.5	—	8.4	ns
	OR2C/2T40A	—	16.7	—	15.5	—	14.2	—	12.5	—	11.7	—	9.1	ns
CLK Input Pin → OUTPUT Pin (Sinklim)	OR2C/2T04A	—	15.9	—	14.8	—	13.8	—	13.4	—	—	—	—	ns
	OR2C/2T06A	—	16.0	—	15.0	—	13.9	—	13.5	—	—	—	—	ns
	OR2C/2T08A	—	16.2	—	15.2	—	14.1	—	13.6	—	—	—	—	ns
	OR2C/2T10A	—	16.4	—	15.4	—	14.2	—	13.7	—	—	—	—	ns
	OR2C/2T12A	—	16.6	—	15.6	—	14.4	—	13.9	—	—	—	—	ns
	OR2C/2T15A	—	16.8	—	15.8	—	14.6	—	14.1	—	12.7	—	11.2	ns
	OR2C/2T26A	—	17.1	—	16.2	—	14.9	—	14.4	—	13.1	—	11.6	ns
	OR2C/2T40A	—	18.5	—	17.6	—	16.3	—	15.6	—	14.3	—	12.2	ns

Notes:
The pin-to-pin timing information from *ORCA* Foundry version 9.2 and later is more accurate than this table. For earlier versions of *ORCA* Foundry, the pin-to-pin timing parameters in this table should be used instead of results reported by *ORCA* Foundry.

This clock delay is for a fully routed clock tree that uses the primary clock network. It includes both the input buffer delay, the clock routing to the PFU CLK input, the clock→Q of the FF, and the delay through the output buffer. The delay will be reduced if any of the clock branches are not used. The given timing requires that the input clock pin be located at one of the four center PICs on any side of the device and that the direct FF→I/O routing be used.

If the clock pin is not located at one of the four center PICs, this delay must be increased by up to the following amounts: OR2C/2T04A = 1.5%, OR2C/2T06A = 2.0%, OR2C/2T08A = 3.1%, OR2C/2T10A = 3.9%, OR2C/2T12A = 4.9%, OR2C/2T15A = 5.7%, OR2C/2T26A = 8.1%, OR2C/2T40A = 12.5%.

Speed grades of -5, -6, and -7 are for OR2TxxA devices only

.Timing Characteristics (continued)

Table 44B. OR2TxxB Global Clock to Output Delay (Pin-to-Pin)—Output Not on Same Side of the Device as the Clock Pin

OR2TxxB Commercial: V_{DD} = 3.0 V to 3.6 V, 0 °C ≤ T_A ≤ 70 °C;
Industrial: V_{DD} = 3.0 V to 3.6 V, –40 °C ≤ T_A ≤ +85 °C; C_L = 50 pF.

Description (T_J = 85 °C, V_{DD} = min)	Device	Speed				Unit
		-7		-8		
		Min	Max	Min	Max	
CLK Input Pin → OUTPUT Pin (Fast)	OR2T15B OR2T40B	— —	7.6 8.1	— —	6.9 7.4	ns ns
CLK Input Pin → OUTPUT Pin (Slewlim)	OR2T15B OR2T40B	— —	8.4 9.0	— —	7.7 8.2	ns ns
CLK Input Pin → OUTPUT Pin (Sinklim)	OR2T15B OR2T40B	— —	13.2 13.7	— —	12.4 12.8	ns ns

Notes:
The pin-to-pin timing information from *ORCA* Foundry version 9.2 and later is more accurate than this table. For earlier versions of *ORCA* Foundry, the pin-to-pin timing parameters in this table should be used instead of results reported by *ORCA* Foundry.

This clock delay is for a fully routed clock tree that uses the primary clock network. It includes both the input buffer delay, the clock routing to the PFU CLK input, the clock→Q of the FF, and the delay through the output buffer. The delay will be reduced if any of the clock branches are not used. The given timing requires that the input clock pin be located at one of the four center PICs on any side of the device and that the direct FF→I/O routing be used.

If the clock pin is not located at one of the four center PICs, this delay must be increased by up to the following amounts: OR2T15B = 5.7%, OR2T40B = 12.5%.

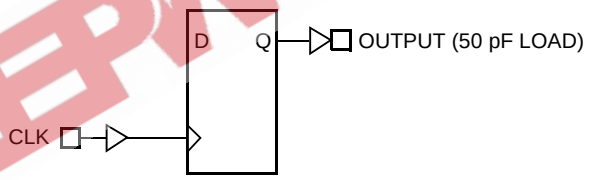

5-4846(F)

Figure 63. Global Clock to Output Delay

Timing Characteristics (continued)

Table 45A. OR2CxxA/OR2TxxA Global Input to Clock Setup/Hold Time (Pin-to-Pin)

OR2CxxA Commercial: V_{DD} = 5.0 V ± 5%, 0 °C ≤ T_A ≤ 70 °C; Industrial: V_{DD} = 5.0 V ± 10%, –40 °C ≤ T_A ≤ +85 °C.
OR2TxxA Commercial: V_{DD} = 3.0 V to 3.6 V, 0 °C ≤ T_A ≤ 70 °C; Industrial: V_{DD} = 3.0 V to 3.6 V, –40 °C ≤ T_A ≤ +85 °C.

Description (T_J = all, V_{DD} = all)	Device	Speed												Unit
		-2		-3		-4		-5		-6		-7		
		Min	Max	Min	Max	Min	Max	Min	Max	Min	Max	Min	Max	
Input to CLK (TTL/CMOS) Setup Time (no delay)	OR2C/2T04A	0.0	—	0.0	—	0.0	—	0.0	—	—	—	—	—	ns
	OR2C/2T06A	0.0	—	0.0	—	0.0	—	0.0	—	—	—	—	—	ns
	OR2C/2T08A	0.0	—	0.0	—	0.0	—	0.0	—	—	—	—	—	ns
	OR2C/2T10A	0.0	—	0.0	—	0.0	—	0.0	—	—	—	—	—	ns
	OR2C/2T12A	0.0	—	0.0	—	0.0	—	0.0	—	—	—	—	—	ns
	OR2C/2T15A	0.0	—	0.0	—	0.0	—	0.0	—	0.0	—	0.0	—	ns
	OR2C/2T26A	0.0	—	0.0	—	0.0	—	0.0	—	0.0	—	0.0	—	ns
	OR2C/2T40A	0.0	—	0.0	—	0.0	—	0.0	—	0.0	—	0.0	—	ns
Input to CLK (TTL/CMOS) Setup Time (delayed)	OR2C/2T04A	5.8	—	5.5	—	4.2	—	4.0	—	—	—	—	—	ns
	OR2C/2T06A	5.7	—	5.4	—	4.1	—	3.9	—	—	—	—	—	ns
	OR2C/2T08A	5.6	—	5.3	—	4.0	—	3.8	—	—	—	—	—	ns
	OR2C/2T10A	5.3	—	5.0	—	3.9	—	3.7	—	—	—	—	—	ns
	OR2C/2T12A	5.2	—	4.9	—	3.8	—	3.6	—	—	—	—	—	ns
	OR2C/2T15A	4.9	—	4.7	—	3.6	—	3.4	—	4.1	—	4.1	—	ns
	OR2C/2T26A	7.3	—	6.9	—	6.0	—	5.7	—	6.7	—	6.0	—	ns
	OR2C/2T40A	6.8	—	6.4	—	5.5	—	5.2	—	6.5	—	5.8	—	ns
Input to CLK (TTL/CMOS) Hold Time (no delay)	OR2C/2T04A	4.2	—	4.0	—	3.8	—	3.6	—	—	—	—	—	ns
	OR2C/2T06A	4.3	—	4.1	—	3.9	—	3.7	—	—	—	—	—	ns
	OR2C/2T08A	4.5	—	4.3	—	4.1	—	3.9	—	—	—	—	—	ns
	OR2C/2T10A	4.8	—	4.6	—	4.4	—	4.2	—	—	—	—	—	ns
	OR2C/2T12A	5.0	—	4.8	—	4.6	—	4.4	—	—	—	—	—	ns
	OR2C/2T15A	5.4	—	5.1	—	4.9	—	4.7	—	4.2	—	3.7	—	ns
	OR2C/2T26A	6.2	—	5.8	—	5.6	—	5.3	—	4.6	—	4.1	—	ns
	OR2C/2T40A	7.9	—	6.8	—	6.6	—	6.3	—	5.8	—	4.9	—	ns
Input to CLK (TTL/CMOS) Hold Time (delayed)	OR2C/2T04A	0.0	—	0.0	—	0.0	—	0.0	—	—	—	—	—	ns
	OR2C/2T06A	0.0	—	0.0	—	0.0	—	0.0	—	—	—	—	—	ns
	OR2C/2T08A	0.0	—	0.0	—	0.0	—	0.0	—	—	—	—	—	ns
	OR2C/2T10A	0.0	—	0.0	—	0.0	—	0.0	—	—	—	—	—	ns
	OR2C/2T12A	0.0	—	0.0	—	0.0	—	0.0	—	—	—	—	—	ns
	OR2C/2T15A	0.0	—	0.0	—	0.0	—	0.0	—	0.0	—	0.0	—	ns
	OR2C/2T26A	0.0	—	0.0	—	0.0	—	0.0	—	0.0	—	0.0	—	ns
	OR2C/2T40A	0.0	—	0.0	—	0.0	—	0.0	—	0.0	—	0.0	—	ns

Notes:
The pin-to-pin timing parameters in this table should be used instead of results reported by *ORCA* Foundry.

This clock delay is for a fully routed clock tree that uses the primary clock network. It includes both the input buffer delay and the clock routing to the PFU CLK input. The delay will be reduced if any of the clock branches are not used. The given Setup (Delayed and No delay) and Hold (Delayed) timing allows the input clock pin to be located in any PIC on any side of the device, but direct I/O→FF routing must be used. The Hold (No delay) timing assumes the clock pin is located at one of the four center PICs and direct I/O→FF routing is used. If it is not located at one of the four center PICs, this delay must be increased by up to the following amounts: OR2C/2T04A = 5.3%, OR2C/2T06A = 6.4%, OR2C/2T08A = 7.3%, OR2C/2T10A = 9.1%, OR2C/2T12A = 10.8%, OR2C/2T15A = 12.2%, OR2C/2T26A = 16.1%, OR2C/2T40A = 21.2%.

Speed grades of -5, -6, and -7 are for OR2TxxA devices only.

Timing Characteristics (continued)

Table 45B. OR2TxxB Global Input to Clock Setup/Hold Time (Pin-to-Pin)

OR2TxxB Commercial: V_{DD} = 3.0 V to 3.6 V, 0 °C ≤ T_A ≤ 70 °C; Industrial: V_{DD} = 3.0 V to 3.6 V, –40 °C ≤ T_A ≤ +85 °C.

Description (T_J = all, V_{DD} = all)	Device	Speed				Unit
		-7		-8		
		Min	Max	Min	Max	
Input to CLK (TTL/CMOS) Setup Time (no delay)	OR2T15B OR2T40B	0.0 0.0	— —	0.0 0.0	— —	ns ns
Input to CLK (TTL/CMOS) Setup Time (delayed)	OR2T15B OR2T40B	4.7 7.7	— —	4.0 5.5	— —	ns ns
Input to CLK (TTL/CMOS) Hold Time (no delay)	OR2T15B OR2T40B	1.6 1.4	— —	1.4 1.3	— —	ns ns
Input to CLK (TTL/CMOS) Hold Time (delayed)	OR2T15B OR2T40B	0.0 0.0	— —	0.0 0.0	— —	ns ns

Notes:
The pin-to-pin timing parameters in this table should be used instead of results reported by *ORCA* Foundry.

This clock delay is for a fully routed clock tree that uses the primary clock network. It includes both the input buffer delay and the clock routing to the PFU CLK input. The delay will be reduced if any of the clock branches are not used. The given Setup (delayed and no delay) and Hold (delayed) timing allows the input clock pin to be located in any PIC on any side of the device, but direct I/O→FF routing must be used. The Hold (no delay) timing assumes the clock pin is located at one of the four center PICs and direct I/O→FF routing is used. If it is not located at one of the four center PICs, this delay must be increased by up to the following amounts: OR2T15B = 5.7%, OR2T40B = 12.5%.

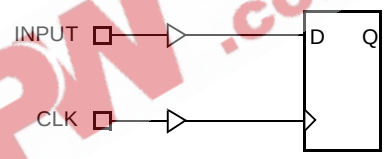

5-4847(F)

Figure 64. Global Input to Clock Setup/Hold Time

Timing Characteristics (continued)

Table 46A. OR2CxxA/OR2TxxA Programmable I/O Cell Timing Characteristics

OR2CxxA Commercial: V_{DD} = 5.0 V ± 5%, 0 °C ≤ T_A ≤ 70 °C; OR2CxxA Industrial: V_{DD} = 5.0 V ± 10%, –40 °C ≤ T_A ≤ +85 °C.
OR2TxxA Commercial: V_{DD} = 3.0 V to 3.6 V, 0 °C ≤ T_A ≤ 70 °C; OR2TxxA Industrial: V_{DD} = 3.0 V to 3.6 V, –40 °C ≤ T_A ≤ +85 °C.

Parameter	Symbol	Speed												Unit
		-2		-3		-4		-5		-6		-7		
		Min	Max	Min	Max	Min	Max	Min	Max	Min	Max	Min	Max	
Inputs (T_J = 85 °C, V_{DD} = min)														
Input Rise Time	T_R	—	500	—	500	—	500	—	500	—	500	—	500	ns
Input Fall Time	T_F	—	500	—	500	—	500	—	500	—	500	—	500	ns
Pad to In Delay	PAD_IN_DEL	—	1.7	—	1.5	—	1.3	—	1.2	—	1.2	—	1.1	ns
Pad to Nearest PFU Latch Output	CHIP_LATCH	—	6.2	—	4.7	—	4.1	—	3.5	—	3.1	—	2.9	ns
Delay Added to General Routing (input buffer in delay mode for OR2C/2T15A and smaller devices)	—	—	8.1	—	7.0	—	6.0	—	5.9	—	6.2	—	5.8	ns
Delay Added to General Routing (input buffer in delay mode for OR2C/2T26A and OR2C/2T40A)	—	—	11.0	—	9.7	—	8.6	—	8.6	—	9.0	—	8.6	ns
Delay Added to Direct-FF Routing (input buffer in delay mode for OR2C/2T15A and smaller devices)	—	—	8.0	—	6.8	—	5.9	—	6.0	—	6.4	—	6.0	ns
Delay Added to Direct-FF Routing (input buffer in delay mode for OR2C/2T26A and OR2C/2T40A)	—	—	10.9	—	10.2	—	8.5	—	8.6	—	9.1	—	7.9	ns
Outputs (T_J = 85 °C, V_{DD} = min, C_L = 50 pF)														
PFU CK to Pad Delay (DOUT[3:0] to PAD):														
Fast	DOUT_DEL(F)	—	7.1	—	6.2	—	5.5	—	5.0	—	4.4	—	3.3	ns
Slewlim	DOUT_DEL(SL)	—	9.4	—	8.4	—	7.4	—	6.4	—	5.6	—	4.1	ns
Sinklim	DOUT_DEL(SI)	—	11.2	—	10.5	—	9.4	—	9.5	—	8.3	—	7.2	ns
Output to Pad Delay (OUT[3:0] to PAD):														
Fast	OUT_DEL(F)	—	5.0	—	4.0	—	3.6	—	3.1	—	2.7	—	2.3	ns
Slewlim	OUT_DEL(SL)	—	6.7	—	6.3	—	5.5	—	4.5	—	3.9	—	3.1	ns
Sinklim	OUT_DEL(SI)	—	9.8	—	7.2	—	7.5	—	7.6	—	6.5	—	6.2	ns
3-state Enable Delay (TS[3:0] to PAD):														
Fast	TS_DEL(F)	—	5.8	—	4.7	—	4.0	—	3.5	—	3.1	—	2.5	ns
Slewlim	TS_DEL(SL)	—	7.5	—	7.0	—	6.3	—	5.2	—	4.7	—	3.7	ns
Sinklim	TS_DEL(SI)	—	10.6	—	7.9	—	8.4	—	9.3	—	8.0	—	7.6	ns

Notes:
If the input buffer is placed in delay mode, the chip hold time to the nearest PFU latch is guaranteed to be 0 if the clock is routed using the primary clock network; (T_J = all, V_{DD} = all). It should also be noted that any signals routed on the clock lines or using the TRIDI buffers directly from the input buffer do not get delayed at any time.

The delays for all input buffers assume an input rise/fall time of ≤1 V/ns.

Speed grades of -5, -6, and -7 are for OR2TxxA devices only

.Timing Characteristics (continued)

Table 46B. OR2TxxB Programmable I/O Cell Timing Characteristics

OR2TxxA Commercial: V_{DD} = 3.0 V to 3.6 V, 0 °C ≤ T_A ≤ 70 °C; OR2TxxA Industrial: V_{DD} = 3.0 V to 3.6 V, –40 °C ≤ T_A ≤ +85 °C.

Parameter	Symbol	Speed				Unit
		-7		-8		
		Min	Max	Min	Max	
Inputs (T_J = 85 °C, V_{DD} = min)						
Input Rise Time	T_R	—	500	—	500	ns
Input Fall Time	T_F	—	500	—	500	ns
Pad to In Delay	PAD_IN_DEL	—	1.1	—	1.0	ns
Pad to Nearest PFU Latch Output	CHIP_LATCH	—	3.3	—	2.4	ns
Delay Added to General Routing (input buffer in delay mode for OR2T15B and smaller devices)	—	—	6.6	—	6.1	ns
Delay Added to General Routing (input buffer in delay mode for OR2T40B)	—	—	8.9	—	8.2	ns
Delay Added to Direct-FF Routing (input buffer in delay mode for OR2T15B and smaller devices)	—	—	6.4	—	6.0	ns
Delay Added to Direct-FF Routing (input buffer in delay mode for OR2T40B)	—	—	8.7	—	8.0	ns
Outputs (T_J = 85 °C, V_{DD} = min, C_L = 50 pF)						
PFU CK to Pad Delay (DOUT[3:0] to PAD):						
Fast	DOUT_DEL(F)	—	2.8	—	2.5	ns
Slewlim	DOUT_DEL(SL)	—	3.6	—	3.3	ns
Sinklim	DOUT_DEL(SI)	—	8.3	—	8.0	ns
Output to Pad Delay (OUT[3:0] to PAD):						
Fast	OUT_DEL(F)	—	2.8	—	2.5	ns
Slewlim	OUT_DEL(SL)	—	3.6	—	3.3	ns
Sinklim	OUT_DEL(SI)	—	8.3	—	8.0	ns
3-state Enable Delay (TS[3:0] to PAD):						
Fast	TS_DEL(F)	—	3.0	—	2.7	ns
Slewlim	TS_DEL(SL)	—	3.8	—	3.4	ns
Sinklim	TS_DEL(SI)	—	9.1	—	8.7	ns

Notes:
If the input buffer is placed in delay mode, the chip hold time to the nearest PFU latch is guaranteed to be 0 if the clock is routed using the primary clock network; (T_J = all, V_{DD} = all). It should also be noted that any signals routed on the clock lines or using the TRIDI buffers directly from the input buffer do not get delayed at any time.

The delays for all input buffers assume an input rise/fall time of ≤1 V/ns.

Timing Characteristics (continued)

Table 47. Series 2 General Configuration Mode Timing Characteristics

OR2CxxA Commercial: V_{DD} = 5.0 V ± 5%, 0 °C ≤ T_A ≤ 70 °C; OR2CxxA Industrial: V_{DD} = 5.0 V ± 10%, –40 °C ≤ T_A ≤ +85 °C.
OR2TxxA/B Commercial: V_{DD} = 3.0 V to 3.6 V, 0 °C ≤ T_A ≤ 70 °C; OR2TxxA/B Industrial: V_{DD} = 3.0 V to 3.6 V,
–40 °C ≤ T_A ≤ +85 °C.

Parameter	Symbol	Min	Max	Unit
All Configuration Modes				
M[3:0] Setup Time to $\overline{\text{INIT}}$ High	T_{SMODE}	50.0	—	ns
M[3:0] Hold Time from $\overline{\text{INIT}}$ High	T_{HMODE}	600.0	—	ns
$\overline{\text{RESET}}$ Pulse Width Low to Start Reconfiguration	T_{RW}	50.0	—	ns
$\overline{\text{PRGM}}$ Pulse Width Low to Start Reconfiguration	T_{PGW}	50.0	—	ns
Master and Asynchronous Peripheral Modes				
Power-on Reset Delay	T_{PO}	17.30	69.47	ms
CCLK Period (M3 = 0)	T_{CCLK}	66.0	265.00	ns
(M3 = 1)		528.00	2120.00	ns
Configuration Latency (noncompressed):	T_{CL}			
OR2C/2T04A (M3 = 0)		4.31	17.30*	ms
(M3 = 1)		34.48	138.40*	ms
OR2C/2T06A (M3 = 0)		6.00	24.08*	ms
(M3 = 1)		48.00	192.64*	ms
OR2C/2T08A (M3 = 0)		7.62	30.60*	ms
(M3 = 1)		60.96	244.80*	ms
OR2C/2T10A (M3 = 0)		9.82	39.43*	ms
(M3 = 1)		78.56	315.44*	ms
OR2C/2T12A (M3 = 0)		11.86	47.62*	ms
(M3 = 1)		94.88	380.96*	ms
OR2C/2T15A/2T15B (M3 = 0)		14.57	58.51*	ms
(M3 = 1)		116.56	468.08*	ms
OR2C/2T26A (M3 = 0)		20.25	81.32*	ms
(M3 = 1)		162.00	650.56*	ms
OR2C/2T40A/2T40B (M3 = 0)		31.29	125.62*	ms
(M3 = 1)		250.32	1004.96*	ms
Slave Serial and Synchronous Peripheral Modes				
Power-on Reset Delay	T_{PO}	4.33	17.37	ms
CCLK Period (OR2CxxA/OR2TxxA)	T_{CCLK}	100.00	—	ns
CCLK Period (OR2TxxB)	T_{CCLK}	25.00	—	ns
Configuration Latency (noncompressed):	T_{CL}			
OR2C/2T04A		6.53	—	ms
OR2C/2T06A		9.09	—	ms
OR2C/2T08A		11.55	—	ms
OR2C/2T10A		14.88	—	ms
OR2C/2T12A		17.97	—	ms
OR2C/2T15A		22.08	—	ms
OR2T15B		5.52	—	ms
OR2C/2T26A		30.69	—	ms
OR2C/2T40A		47.40	—	ms
OR2T40B		11.85	—	ms

* Not applicable to asynchronous peripheral mode.

Timing Characteristics (continued)

Table 47. Series 2 General Configuration Mode Timing Characteristics (continued)

OR2CxxA Commercial: V_{DD} = 5.0 V ± 5%, 0 °C ≤ T_A ≤ 70 °C; OR2CxxA Industrial: V_{DD} = 5.0 V ± 10%, –40 °C ≤ T_A ≤ +85 °C. OR2TxxA/B Commercial: V_{DD} = 3.0 V to 3.6 V, 0 °C ≤ T_A ≤ 70 °C; OR2TxxA/B Industrial: V_{DD} = 3.0 V to 3.6 V, –40 °C ≤ T_A ≤ +85 °C.

Parameter	Symbol	Min	Max	Unit
Slave Parallel Mode				
Power-on Reset Delay	T_{PO}	4.33	17.37	ms
CCLK Period (OR2CxxA/OR2TxxA)	T_{CCLK}	100.00	—	ns
CCLK Period (OR2TxxB)	T_{CCLK}	25.0	—	ns
Configuration Latency (noncompressed):	T_{CL}			
OR2C/2T04A		0.82	—	ms
OR2C/2T06A		1.14	—	ms
OR2C/2T08A		1.44	—	ms
OR2C/2T10A		1.86	—	ms
OR2C/2T12A		2.25	—	ms
OR2C/2T15A		2.76	—	ms
OR2T15B		0.69	—	ms
OR2C/2T26A		3.84	—	ms
OR2C/2T40A		5.93	—	ms
OR2T40B		1.48	—	ms
Partial Reconfiguration (noncompressed):	T_{PR}			
OR2C/2T04A		1.70	—	µs/frame
OR2C/2T06A		2.00	—	µs/frame
OR2C/2T08A		2.20	—	µs/frame
OR2C/2T10A		2.50	—	µs/frame
OR2C/2T12A		2.70	—	µs/frame
OR2C/2T15A/2T15B		3.00	—	µs/frame
OR2C/2T26A		3.50	—	µs/frame
OR2C/2T40A/2T40B		4.30	—	µs/frame
$\overline{\text{INIT}}$ Timing				
$\overline{\text{INIT}}$ High to CCLK Delay:	T_{INIT_CLK}			
Slave Parallel		1.00	—	µs
Slave Serial		1.00	—	µs
Synchronous Peripheral		1.00	—	µs
Master Serial:				
(M3 = 1)		1.06	4.51	µs
(M3 = 0)		0.59	2.65	µs
Master Parallel:				
(M3 = 1)		5.28	21.47	µs
(M3 = 0)		1.12	4.77	µs
Initialization Latency ($\overline{\text{PRGM}}$ high to $\overline{\text{INIT}}$ high):	T_{IL}			
OR2C/2T04A		63.36	254.40	µs
OR2C/2T06A		74.98	301.04	µs
OR2C/2T08A		86.59	347.68	µs
OR2C/2T10A		98.21	394.32	µs
OR2C/2T12A		109.82	440.96	µs
OR2C/2T15A/2T15B		121.44	487.60	µs
OR2C/2T26A		144.67	580.88	µs
OR2C/2T40A/2T40B		181.90	730.34	µs
$\overline{\text{INIT}}$ High to $\overline{\text{WR}}$, Asynchronous Peripheral	T_{INIT_WR}	1.50	—	µs

Note: T_{PO} is triggered when V_{DD} reaches between 3.0 V to 4.0 V for the OR2CxxA and between 2.7 V and 3.0 V for the OR2TxxA/OR2TxxB.

Timing Characteristics (continued)

Series 2

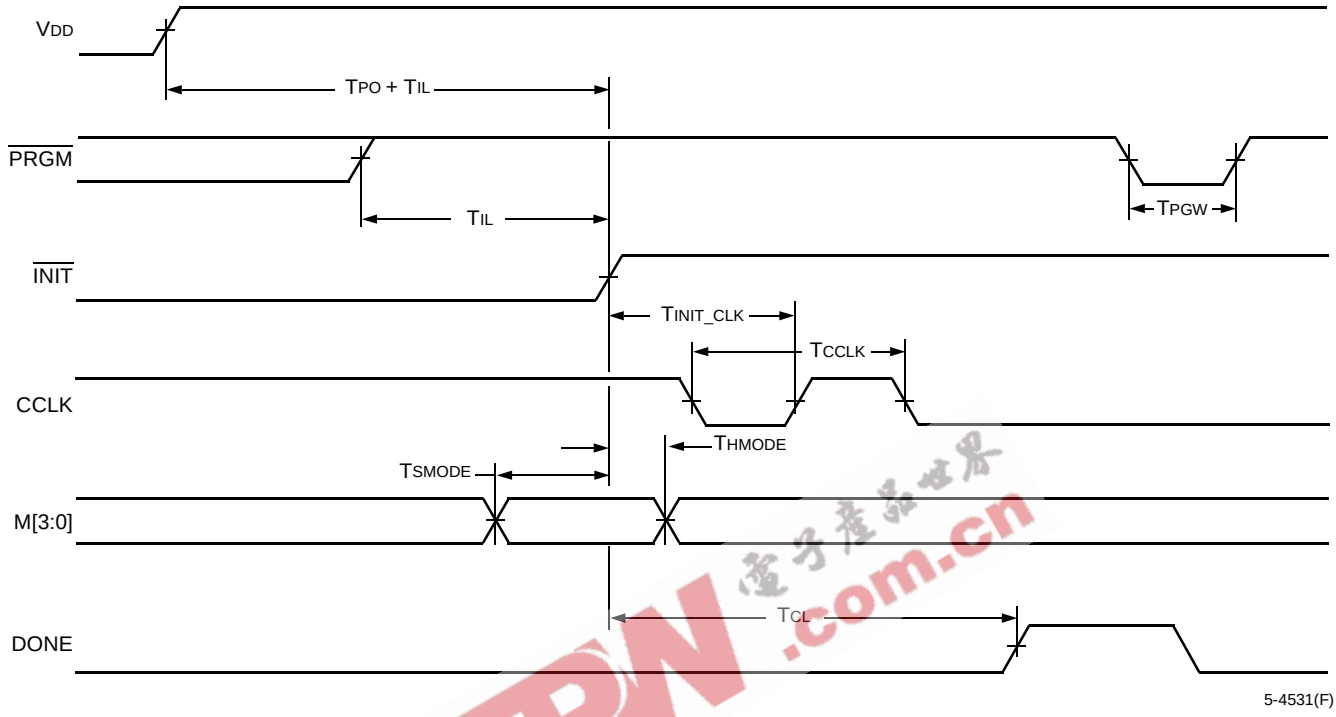

Figure 65. General Configuration Mode Timing Diagram

Timing Characteristics (continued)

Table 48. Series 2 Master Serial Configuration Mode Timing Characteristics

OR2CxxA Commercial: V_{DD} = 5.0 V ± 5%, 0 °C ≤ T_A ≤ 70 °C; OR2CxxA Industrial: V_{DD} = 5.0 V ± 10%, –40 °C ≤ T_A ≤ +85 °C.
OR2TxxA/B Commercial: V_{DD} = 3.0 V to 3.6 V, 0 °C ≤ T_A ≤ 70 °C; OR2TxxA/B Industrial: V_{DD} = 3.0 V to 3.6 V,
–40 °C ≤ T_A ≤ +85 °C.

Parameter	Symbol	Min	Nom	Max	Unit
DIN Setup Time	T_S	60.0	—	—	ns
DIN Hold Time	T_H	0	—	—	ns
CCLK Frequency (M3 = 0)	F_C	3.8	10.0	15.2	MHz
CCLK Frequency (M3 = 1)	F_C	0.48	1.25	1.9	MHz
CCLK to DOUT Delay	T_D	—	—	30	ns

Note: Serial configuration data is transmitted out on DOUT on the falling edge of CCLK after it is input DIN.

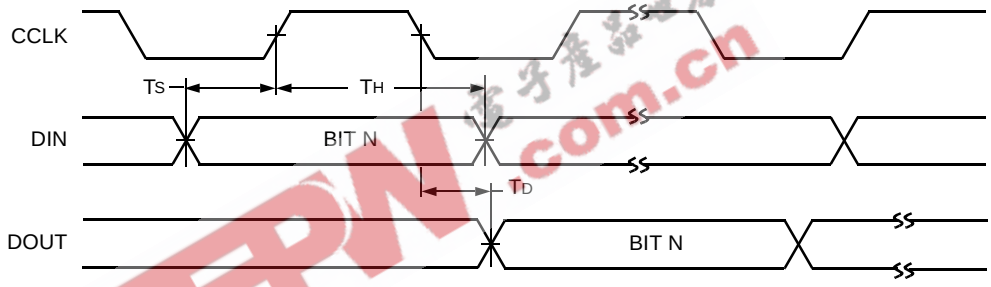

Figure 66. Master Serial Configuration Mode Timing Diagram

Timing Characteristics (continued)

Table 49. Series 2 Master Parallel Configuration Mode Timing Characteristics

OR2CxxA Commercial: V_{DD} = 5.0 V ± 5%, 0 °C ≤ T_A ≤ 70 °C; OR2CxxA Industrial: V_{DD} = 5.0 V ± 10%, –40 °C ≤ T_A ≤ +85 °C.
OR2TxxA/B Commercial: V_{DD} = 3.0 V to 3.6 V, 0 °C ≤ T_A ≤ 70 °C; OR2TxxA/B Industrial: V_{DD} = 3.0 V to 3.6 V,
–40 °C ≤ T_A ≤ +85 °C.

Parameter	Symbol	Min	Max	Unit
RCLK to Address Valid	T_{AV}	0	200	ns
D[7:0] Setup Time to RCLK High	T_S	60	—	ns
D[7:0] Hold Time to RCLK High	T_H	0	—	ns
RCLK Low Time (M3 = 0)	T_{CL}	462	1855	ns
RCLK High Time (M3 = 0)	T_{CH}	66	265	ns
RCLK Low Time (M3 = 1)	T_{CL}	3696	14840	ns
RCLK High Time (M3 = 1)	T_{CH}	528	2120	ns
CCLK to DOUT	T_D	—	30	ns

Notes:
The RCLK period consists of seven CCLKs for RCLK low and one CCLK for RCLK high.

Serial data is transmitted out on DOUT 1.5 CCLK cycles after the byte is input D[7:0].

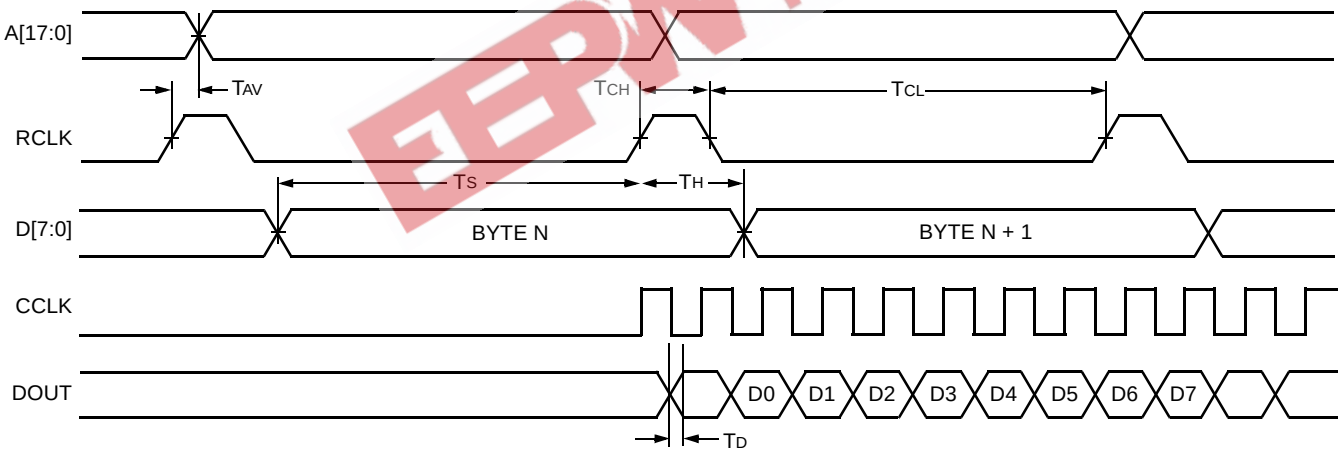

f.44(F)

Figure 67. Master Parallel Configuration Mode Timing Diagram

Timing Characteristics (continued)

Table 50. Series 2 Asynchronous Peripheral Configuration Mode Timing Characteristics

OR2CxxA Commercial: V_{DD} = 5.0 V ± 5%, 0 °C ≤ T_A ≤ 70 °C; OR2CxxA Industrial: V_{DD} = 5.0 V ± 10%, –40 °C ≤ T_A ≤ +85 °C.
OR2TxxA/B Commercial: V_{DD} = 3.0 V to 3.6 V, 0 °C ≤ T_A ≤ 70 °C; OR2TxxA/B Industrial: V_{DD} = 3.0 V to 3.6 V,
–40 °C ≤ T_A ≤ +85 °C.

Parameter	Symbol	Min	Max	Unit
$\overline{WR}$, $\overline{CS0}$, and CS1 Pulse Width	T_{WR}	100	—	ns
D[7:0] Setup Time	T_S	20	—	ns
D[7:0] Hold Time	T_H	0	—	ns
RDY Delay	T_{RDY}	—	60	ns
RDY Low	T_B	1	8	CCLK Periods
Earliest $\overline{WR}$ After RDY Goes High*	T_{WR2}	0	—	ns
$\overline{RD}$ to D7 Enable/Disable	T_{DEN}	—	60	ns
CCLK to DOUT	T_D	—	30	ns

* This parameter is valid whether the end of not RDY is determined from the RDY/RCLK pin or from the D7 pin.

Notes:
Serial data is transmitted out on DOUT on the falling edge of CCLK after the byte is input D[7:0].

D[6:0] timing is the same as the write data port of the D7 waveform because D[6:0] are not enabled.

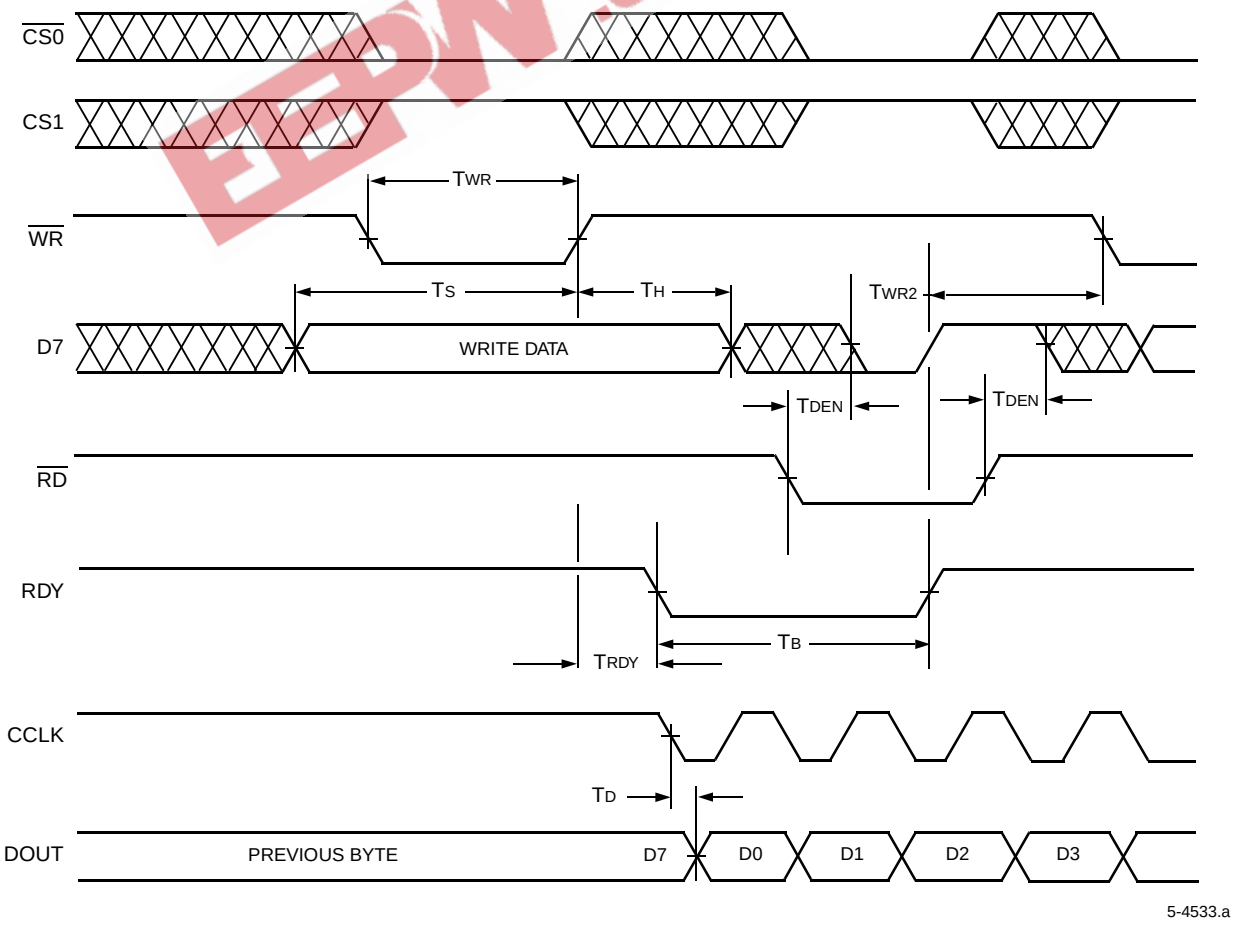

Figure 68. Asynchronous Peripheral Configuration Mode Timing Diagram

Timing Characteristics (continued)

Table 51A. OR2CxxA/OR2TxxA Synchronous Peripheral Configuration Mode Timing Characteristics

OR2CxxA Commercial: V_{DD} = 5.0 V ± 5%, 0 °C ≤ T_A ≤ 70 °C; OR2CxxA Industrial: V_{DD} = 5.0 V ± 10%, –40 °C ≤ T_A ≤ +85 °C.
OR2TxxA Commercial: V_{DD} = 3.0 V to 3.6 V, 0 °C ≤ T_A ≤ 70 °C; OR2TxxA Industrial: V_{DD} = 3.0 V to 3.6 V, –40 °C ≤ T_A ≤ +85 °C.

Parameter	Symbol	Min	Max	Unit
D[7:0] Setup Time	T_S	20	—	ns
D[7:0] Hold Time	T_H	0	—	ns
CCLK High Time	T_{CH}	50	—	ns
CCLK Low Time	T_{CL}	50	—	ns
CCLK Frequency	F_C	—	10	MHz
CCLK to DOUT	T_D	—	30	ns

Note: Serial data is transmitted out on DOUT 1.5 clock cycles after the byte is input D[7:0].

Table 51B. OR2TxxB Synchronous Peripheral Configuration Mode Timing Characteristics

OR2TxxB Commercial: V_{DD} = 3.0 V to 3.6 V, 0 °C ≤ T_A ≤ 70 °C; OR2TxxB Industrial: V_{DD} = 3.0 V to 3.6 V, –40 °C ≤ T_A ≤ +85 °C.

Parameter	Symbol	Min	Max	Unit
D[7:0] Setup Time	T_S	15	—	ns
D[7:0] Hold Time	T_H	0	—	ns
CCLK High Time	T_{CH}	12.5	—	ns
CCLK Low Time	T_{CL}	12.5	—	ns
CCLK Frequency	F_C	—	40	MHz
CCLK to DOUT	T_D	—	10	ns

Note: Serial data is transmitted out on DOUT 1.5 clock cycles after the byte is input D[7:0].

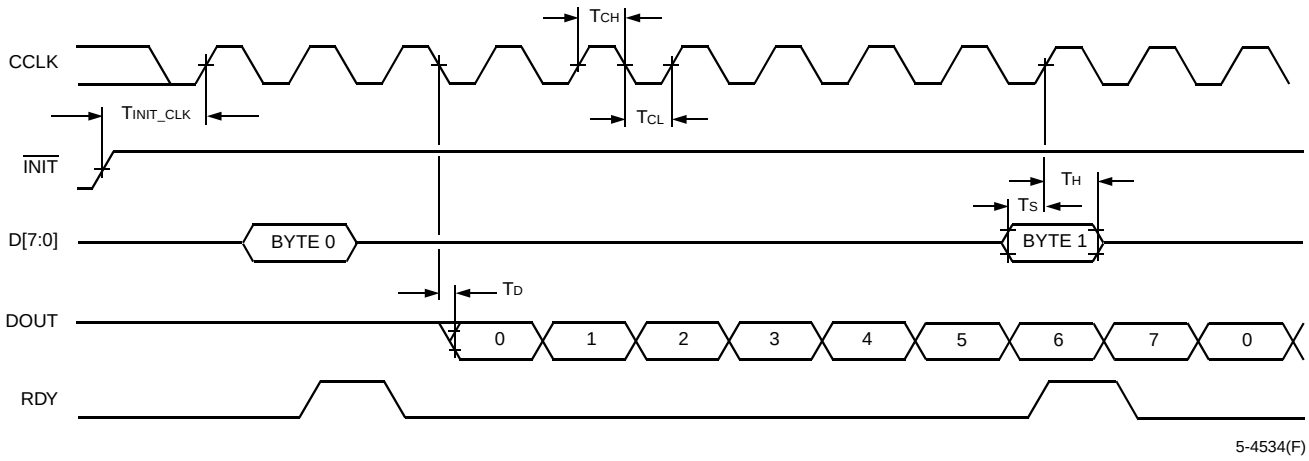

Figure 69. Synchronous Peripheral Configuration Mode Timing Diagram

Timing Characteristics (continued)

Table 52A. OR2CxxA/OR2TxxA Slave Serial Configuration Mode Timing Characteristics

OR2CxxA Commercial: V_{DD} = 5.0 V ± 5%, 0 °C ≤ T_A ≤ 70 °C; OR2CxxA Industrial: V_{DD} = 5.0 V ± 10%, –40 °C ≤ T_A ≤ +85 °C.
OR2TxxA Commercial: V_{DD} = 3.0 V to 3.6 V, 0 °C ≤ T_A ≤ 70 °C; OR2TxxA Industrial: V_{DD} = 3.0 V to 3.6 V, –40 °C ≤ T_A ≤ +85 °C

Parameter	Symbol	Min	Max	Unit
DIN Setup Time	T_S	20	—	ns
DIN Hold Time	T_H	0	—	ns
CCLK High Time	T_{CH}	50	—	ns
CCLK Low Time	T_{CL}	50	—	ns
CCLK Frequency	F_C	—	10	MHz
CCLK to DOUT	T_D	—	30	ns

Note: Serial configuration data is transmitted out on DOUT on the falling edge of CCLK after it is input on DIN.

Table 52B. OR2TxxB Slave Serial Configuration Mode Timing Characteristics

OR2TxxB Commercial: V_{DD} = 3.0 V to 3.6 V, 0 °C ≤ T_A ≤ 70 °C; OR2TxxB Industrial: V_{DD} = 3.0 V to 3.6 V, –40 °C ≤ T_A ≤ +85 °C.

Parameter	Symbol	Min	Max	Unit
DIN Setup Time	T_S	15	—	ns
DIN Hold Time	T_H	0	—	ns
CCLK High Time	T_{CH}	12.5	—	ns
CCLK Low Time	T_{CL}	12.5	—	ns
CCLK Frequency	F_C	—	40	MHz
CCLK to DOUT	T_D	—	10	ns

Note: Serial configuration data is transmitted out on DOUT on the falling edge of CCLK after it is input on DIN

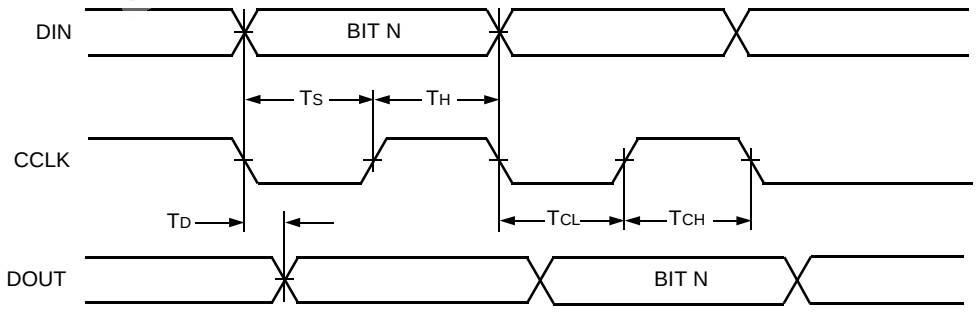

Figure 70. Slave Serial Configuration Mode Timing Diagram

Timing Characteristics (continued)

Table 53A. OR2CxxA/OR2TxxA Slave Parallel Configuration Mode Timing Characteristics

OR2CxxA Commercial: V_{DD} = 5.0 V ± 5%, 0 °C ≤ T_A ≤ 70 °C; OR2CxxA Industrial: V_{DD} = 5.0 V ± 10%, –40 °C ≤ T_A ≤ +85 °C.
OR2TxxA Commercial: V_{DD} = 3.0 V to 3.6 V, 0 °C ≤ T_A ≤ 70 °C; OR2TxxA Industrial: V_{DD} = 3.0 V to 3.6 V, –40 °C ≤ T_A ≤ +85 °C.

Parameter	Symbol	Min	Max	Unit
$\overline{CS0}$, CS1, $\overline{WR}$ Setup Time	T_{S1}	60	—	ns
$\overline{CS0}$, CS1, $\overline{WR}$ Hold Time	T_{H1}	20	—	ns
D[7:0] Setup Time	T_{S2}	20	—	ns
D[7:0] Hold Time	T_{H2}	0	—	ns
CCLK High Time	T_{CH}	50	—	ns
CCLK Low Time	T_{CL}	50	—	ns
CCLK Frequency	F_C	—	10	MHz

Note: Daisy chaining of FPGAs is not supported in this mode.

Table 53B. OR2TxxB Slave Parallel Configuration Mode Timing Characteristics

OR2TxxB Commercial: V_{DD} = 3.0 V to 3.6 V, 0 °C ≤ T_A ≤ 70 °C; OR2TxxB Industrial: V_{DD} = 3.0 V to 3.6 V, –40 °C ≤ T_A ≤ +85 °C.

Parameter	Symbol	Min	Max	Unit
$\overline{CS0}$, CS1, $\overline{WR}$ Setup Time	T_{S1}	—	—	—
$\overline{CS0}$, CS1, $\overline{WR}$ Hold Time	T_{H1}	15	—	ns
D[7:0] Setup Time	T_{S2}	15	—	ns
D[7:0] Hold Time	T_{H2}	0	—	ns
CCLK High Time	T_{CH}	12.5	—	ns
CCLK Low Time	T_{CL}	12.5	—	ns
CCLK Frequency	F_C	—	40	MHz

Note: Daisy chaining of FPGAs is not supported in this mode.

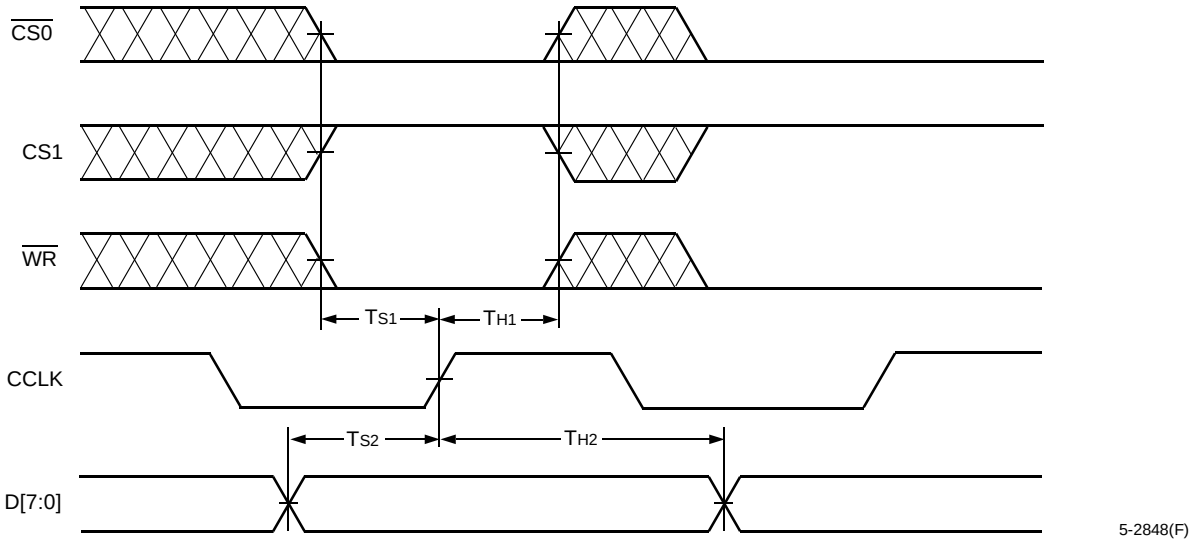

Figure 71. Slave Parallel Configuration Mode Timing Diagram

Timing Characteristics (continued)

Table 54. Series 2 Readback Timing Characteristics

OR2CxxA Commercial: V_{DD} = 5.0 V ± 5%, 0 °C ≤ T_A ≤ 70 °C; OR2CxxA Industrial: V_{DD} = 5.0 V ± 10%, –40 °C ≤ T_A ≤ +85 °C.
OR2TxxA/B Commercial: V_{DD} = 3.0 V to 3.6 V, 0 °C ≤ T_A ≤ 70 °C; OR2TxxA/B Industrial: V_{DD} = 3.0 V to 3.6 V,
–40 °C ≤ T_A ≤ +85 °C.

Parameter	Symbol	Min	Max	Unit
$\overline{\text{RD\_CFGN}}$ to CCLK Setup Time	T_S	50	—	ns
$\overline{\text{RD\_CFGN}}$ High Width to Abort Readback	T_{RBA}	2	—	CCLK
CCLK Low Time	T_{CL}	50	—	ns
CCLK High Time	T_{CH}	50	—	ns
CCLK Frequency	F_C	—	10	MHz
CCLK to RD_DATA Delay	T_D	—	50	ns

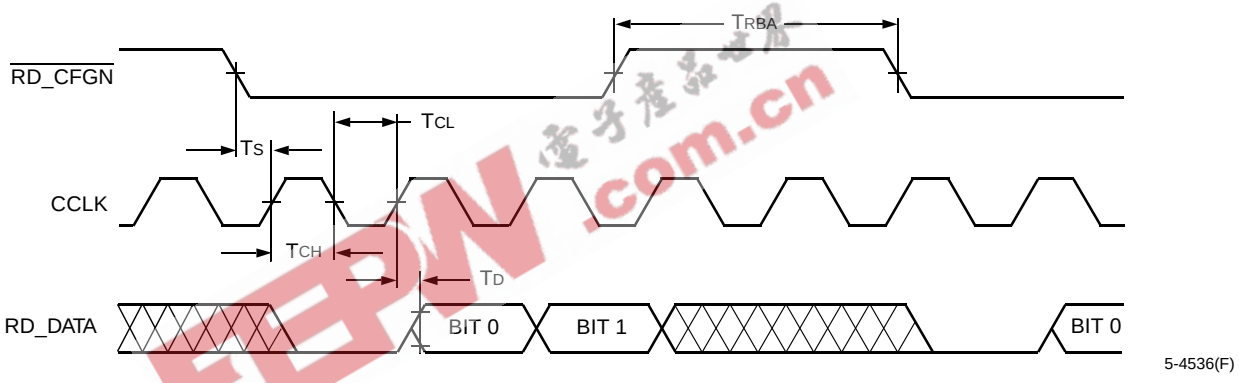

Figure 72. Readback Timing Diagram

Timing Characteristics (continued)

Table 55. Series 2 Boundary-Scan Timing Characteristics

OR2CxxA Commercial: V_{DD} = 5.0 V ± 5%, 0 °C ≤ T_A ≤ 70 °C; OR2CxxA Industrial: V_{DD} = 5.0 V ± 10%, –40 °C ≤ T_A ≤ +85 °C.
OR2TxxA Commercial: V_{DD} = 3.0 V to 3.6 V, 0 °C ≤ T_A ≤ 70 °C; OR2TxxA Industrial: V_{DD} = 3.0 V to 3.6 V, –40 °C ≤ T_A ≤ +85 °C.
OR2TxxB Commercial: V_{DD} = 3.0 V to 3.6 V, 0 °C ≤ T_A ≤ 70 °C; OR2TxxB Industrial: V_{DD} = 3.0 V to 3.6 V, –40 °C ≤ T_A ≤ +85 °C.

Parameter	Symbol	Min	Max	Unit
TDI/TMS to TCK Setup Time	T_S	25	—	ns
TDI/TMS Hold Time from TCK	T_H	0	—	ns
TCK Low Time	T_{CL}	50	—	ns
TCK High Time	T_{CH}	50	—	ns
TCK to TDO Delay	T_D	—	20	ns
TCK Frequency	T_{TCK}	—	10	MHz

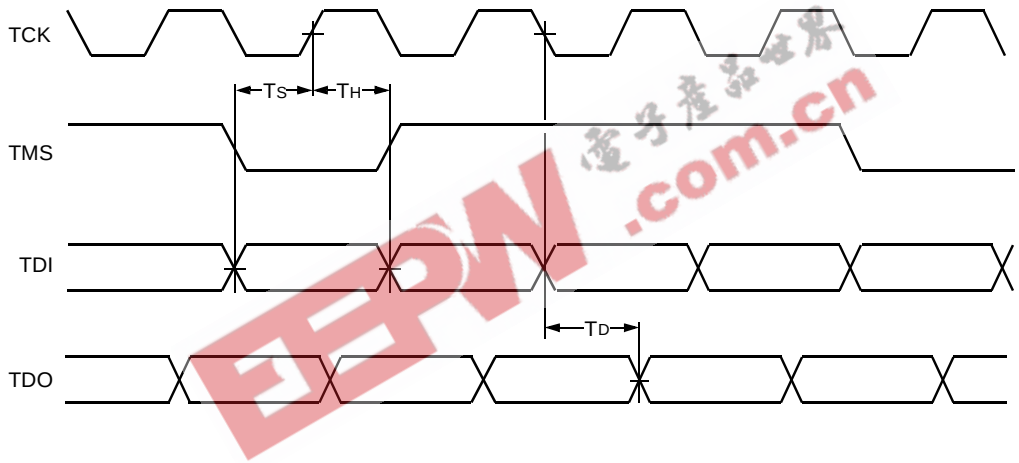

Figure 73. Boundary-Scan Timing Diagram

Measurement Conditions

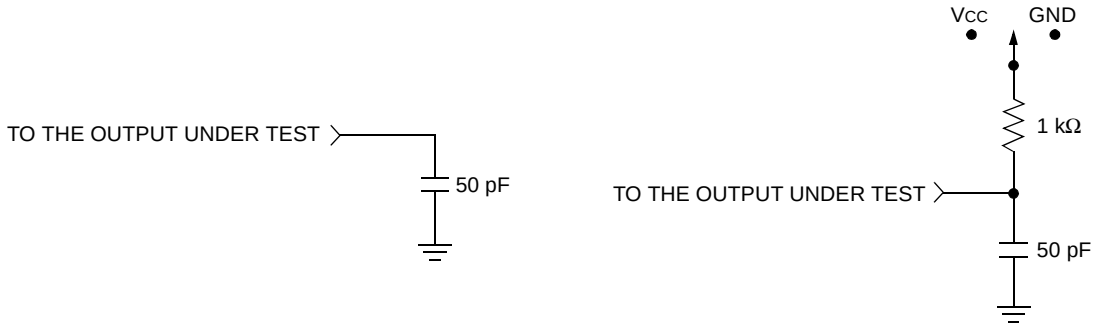

A. Load Used to Measure Propagation Delay

B. Load Used to Measure Rising/Falling Edges

5-3234(F).r1

Figure 74. ac Test Loads

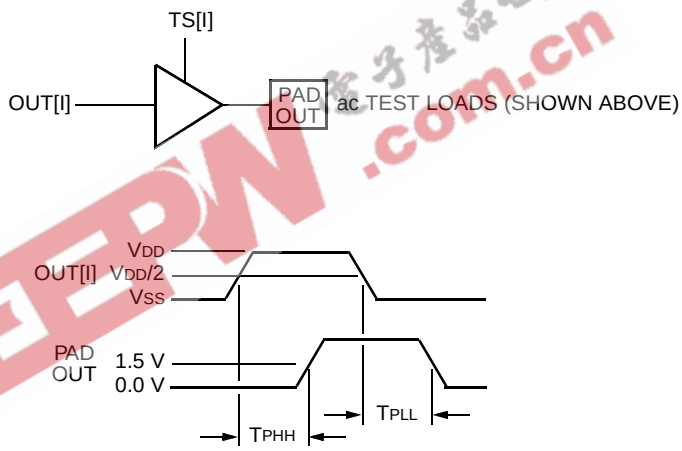

5-3233(F).ar4

Figure 75. Output Buffer Delays

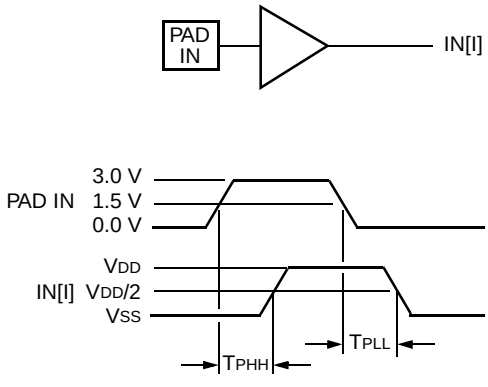

5-3235(F).a

Figure 76. Input Buffer Delays

Output Buffer Characteristics

OR2CxxA

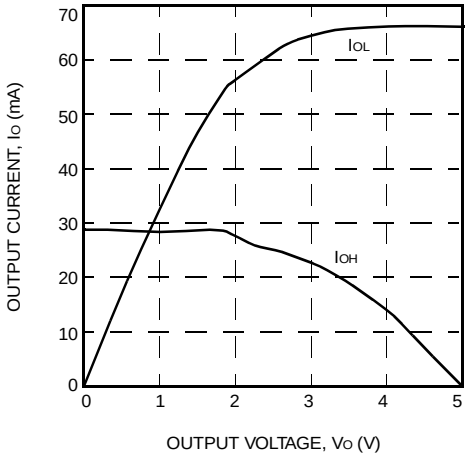

5-4634(F)

Figure 77. Sinklim (T_J = 25 °C, V_{DD} = 5.0 V)

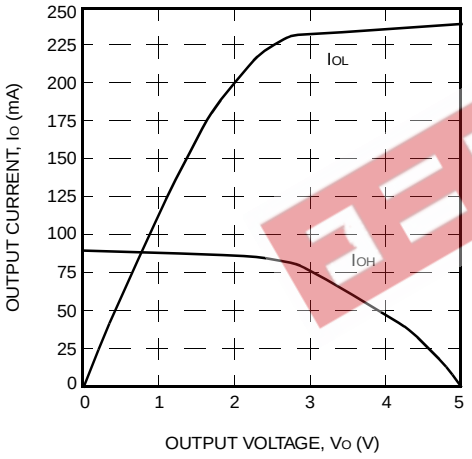

5-4636(F)

Figure 78. Slewlim (T_J = 25 °C, V_{DD} = 5.0 V)

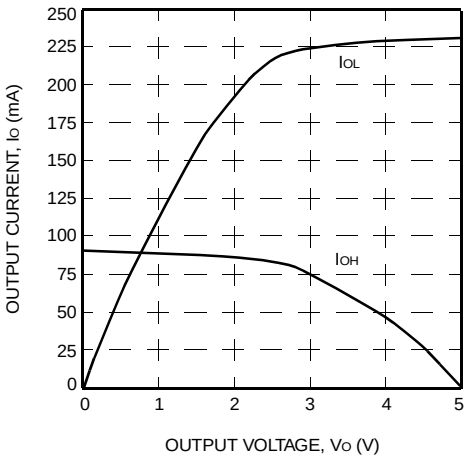

5-4638(F)

Figure 79. Fast (T_J = 25 °C, V_{DD} = 5.0 V)

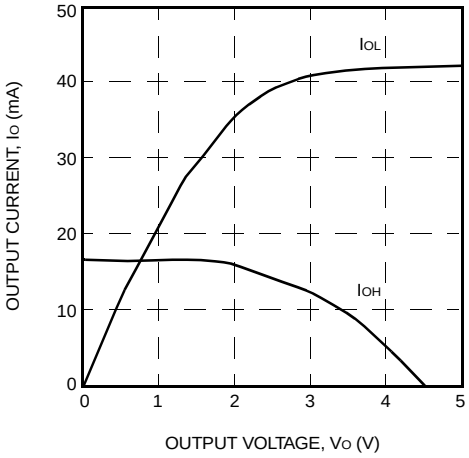

5-4635(F)

Figure 80. Sinklim (T_J = 125 °C, V_{DD} = 4.5 V)

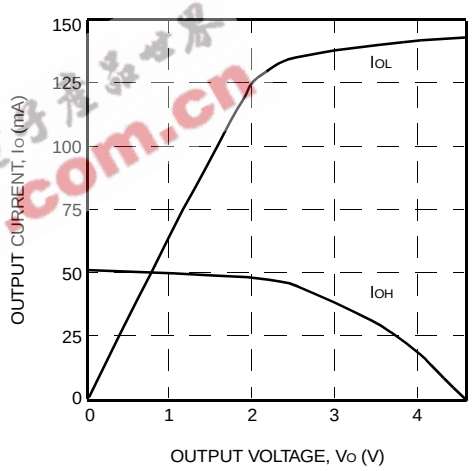

5-4637(F)

Figure 81. Slewlim (T_J = 125 °C, V_{DD} = 4.5 V)

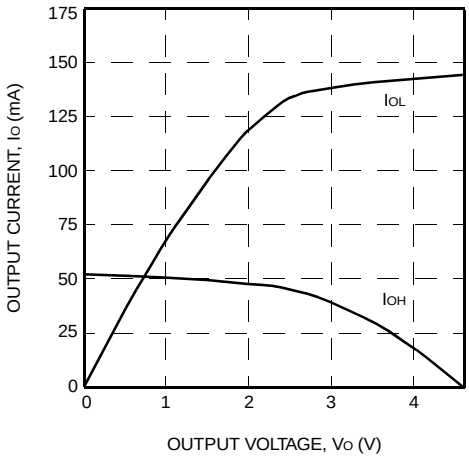

5-4639(F)

Figure 82. Fast (T_J = 125 °C, V_{DD} = 4.5 V)

EEPW 電子產品世界 .com.cn

Output Buffer Characteristics (continued)

OR2TxxA

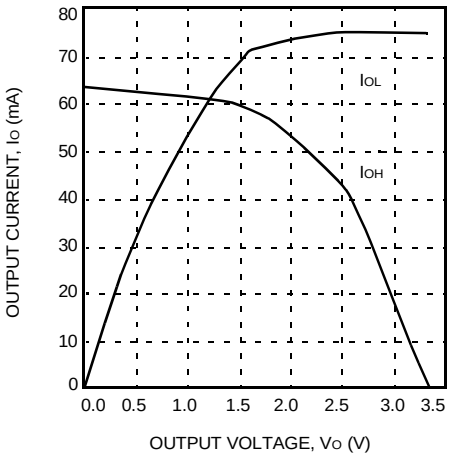

5-4637(F)

Figure 83. Sinklim (T_J = 25 °C, V_{DD} = 3.3 V)

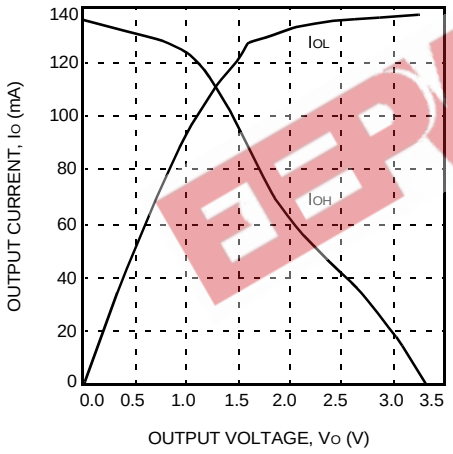

5-4637(F)

Figure 84. Slewlim (T_J = 25 °C, V_{DD} = 3.3 V)

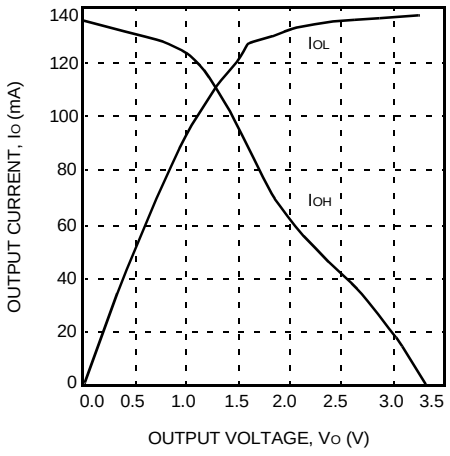

5-4637(F)

Figure 85. Fast (T_J = 25 °C, V_{DD} = 3.3 V)

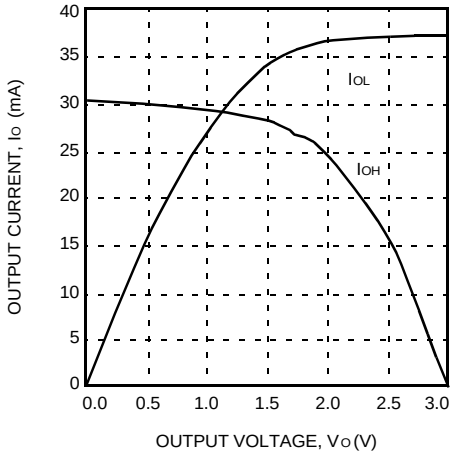

5-4637(F)

Figure 86. Sinklim (T_J = 125 °C, V_{DD} = 3.0 V)

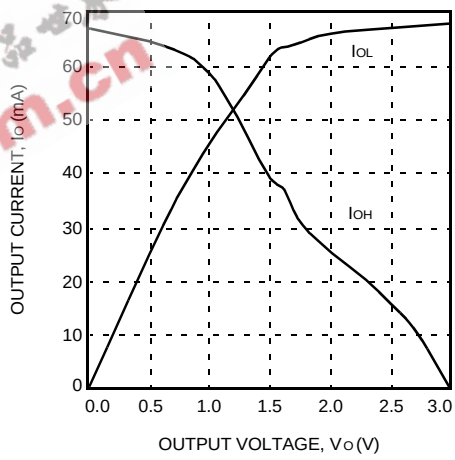

5-4637(F)

Figure 87. Slewlim (T_J = 125 °C, V_{DD} = 3.0 V)

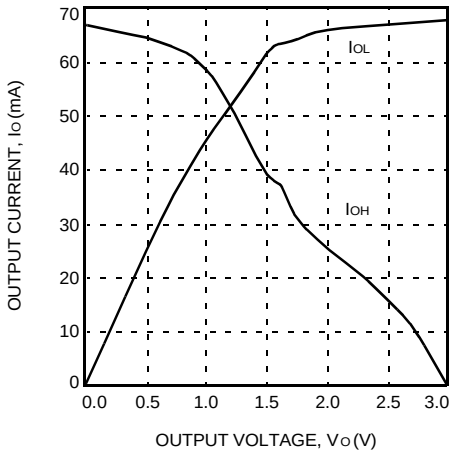

5-4637(F)

Figure 88. Fast (T_J = 125 °C, V_{DD} = 3.0 V)

EEPW .com.cn

Output Buffer Characteristics (continued)

OR2TxxB

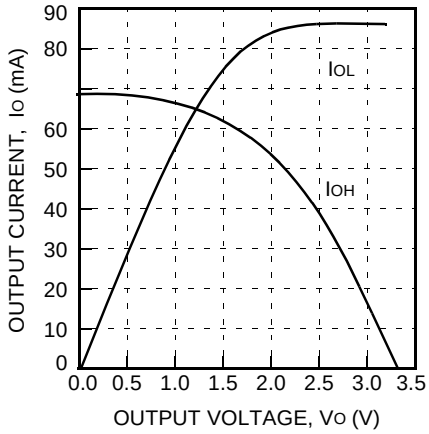

Figure 89. Sinklim (T_J = 25 °C, V_{DD} = 3.3 V)

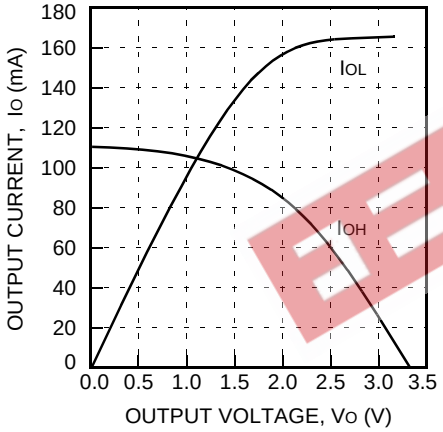

Figure 90. Slewlim (T_J = 25 °C, V_{DD} = 3.3 V)

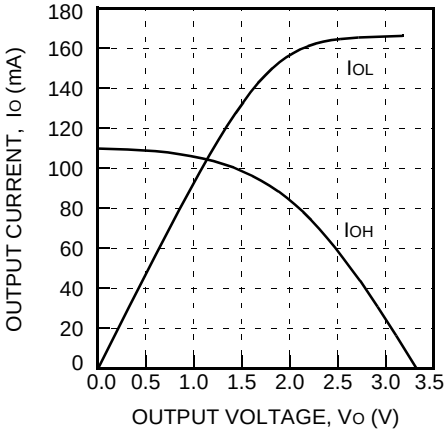

Figure 91. Fast (T_J = 25 °C, V_{DD} = 3.3 V)

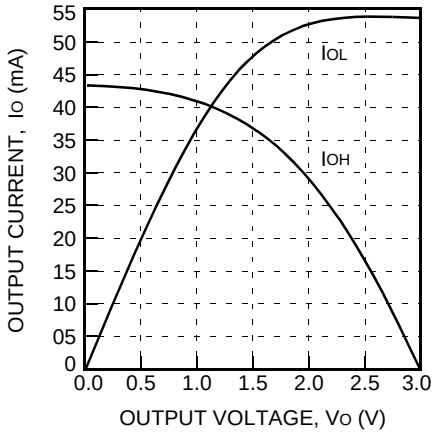

Figure 92. Sinklim (T_J = 125 °C, V_{DD} = 3.0 V)

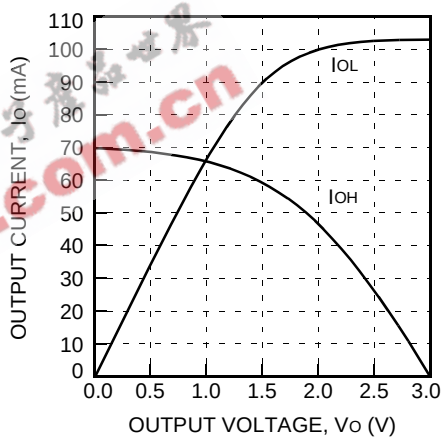

Figure 93. Slewlim (T_J = 125 °C, V_{DD} = 3.0 V)

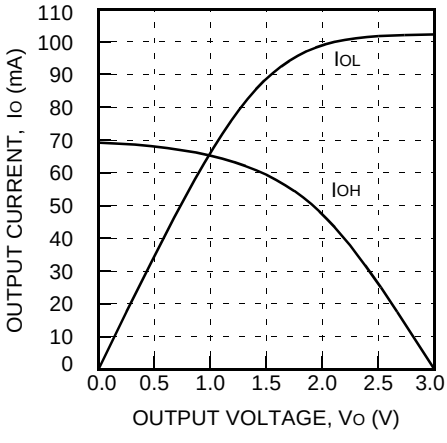

Figure 94. Fast (T_J = 125 °C, V_{DD} = 3.0 V)

EEPW .com.cn

Package Outline Drawings

Terms and Definitions

Basic Size (BSC):	The basic size of a dimension is the size from which the limits for that dimension are derived by the application of the allowance and the tolerance.
Design Size:	The design size of a dimension is the actual size of the design, including an allowance for fit and tolerance.
Minimum (MIN) or Maximum (MAX):	Indicates the minimum or maximum allowable size of a dimension.
Reference (REF):	The reference dimension is an untoleranced dimension used for informational purposes only. It is a repeated dimension or one that can be derived from other values in the drawing.
Typical (TYP):	When specified after a dimension, this indicates the repeated design size if a tolerance is specified or repeated basic size if a tolerance is not specified.

EEPW .com.cn

Package Outline Drawings (continued)

84-Pin PLCC

Dimensions are in millimeters.

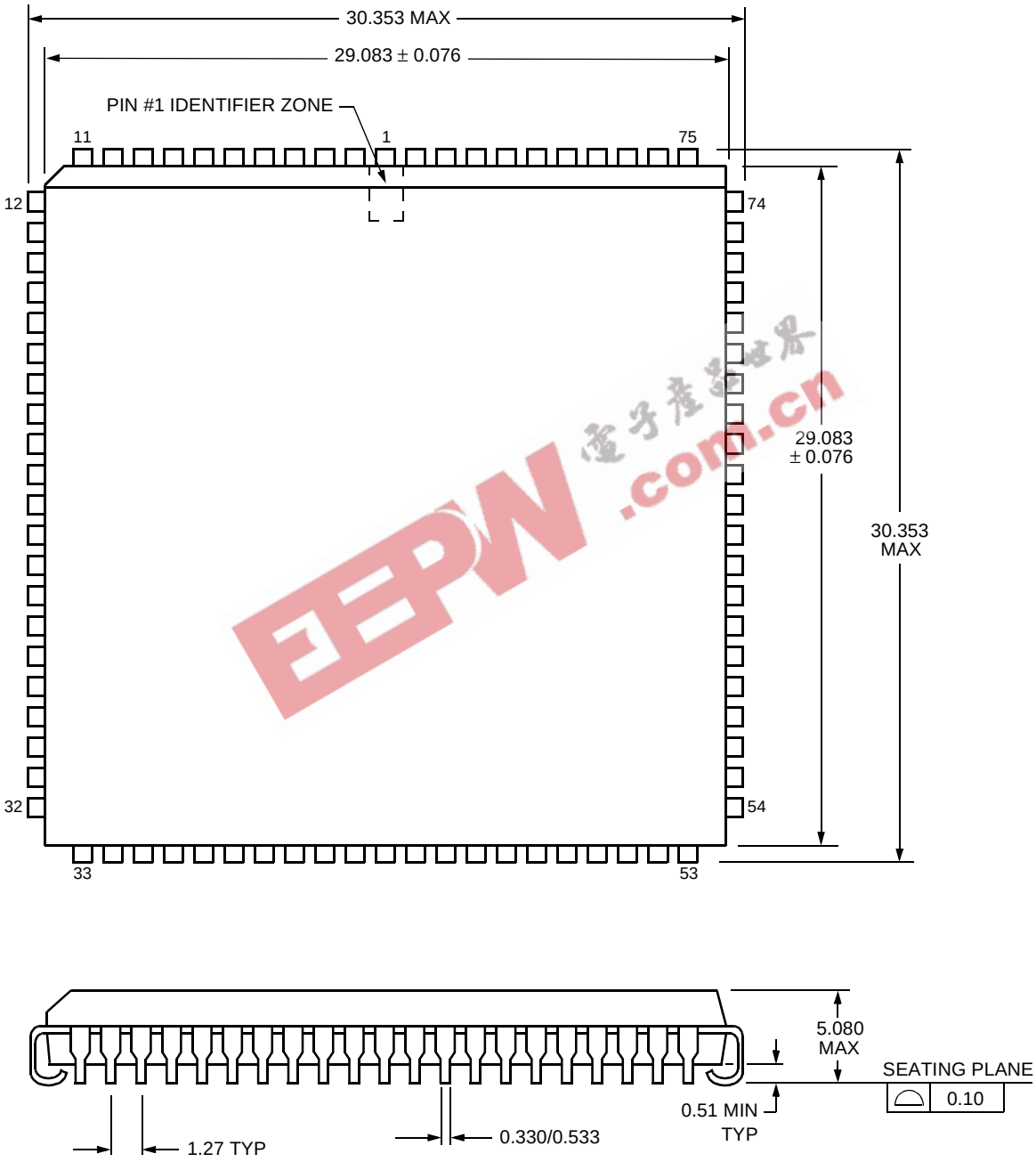

5-2347r.16

Package Outline Drawings (continued)

100-Pin TQFP

Dimensions are in millimeters.

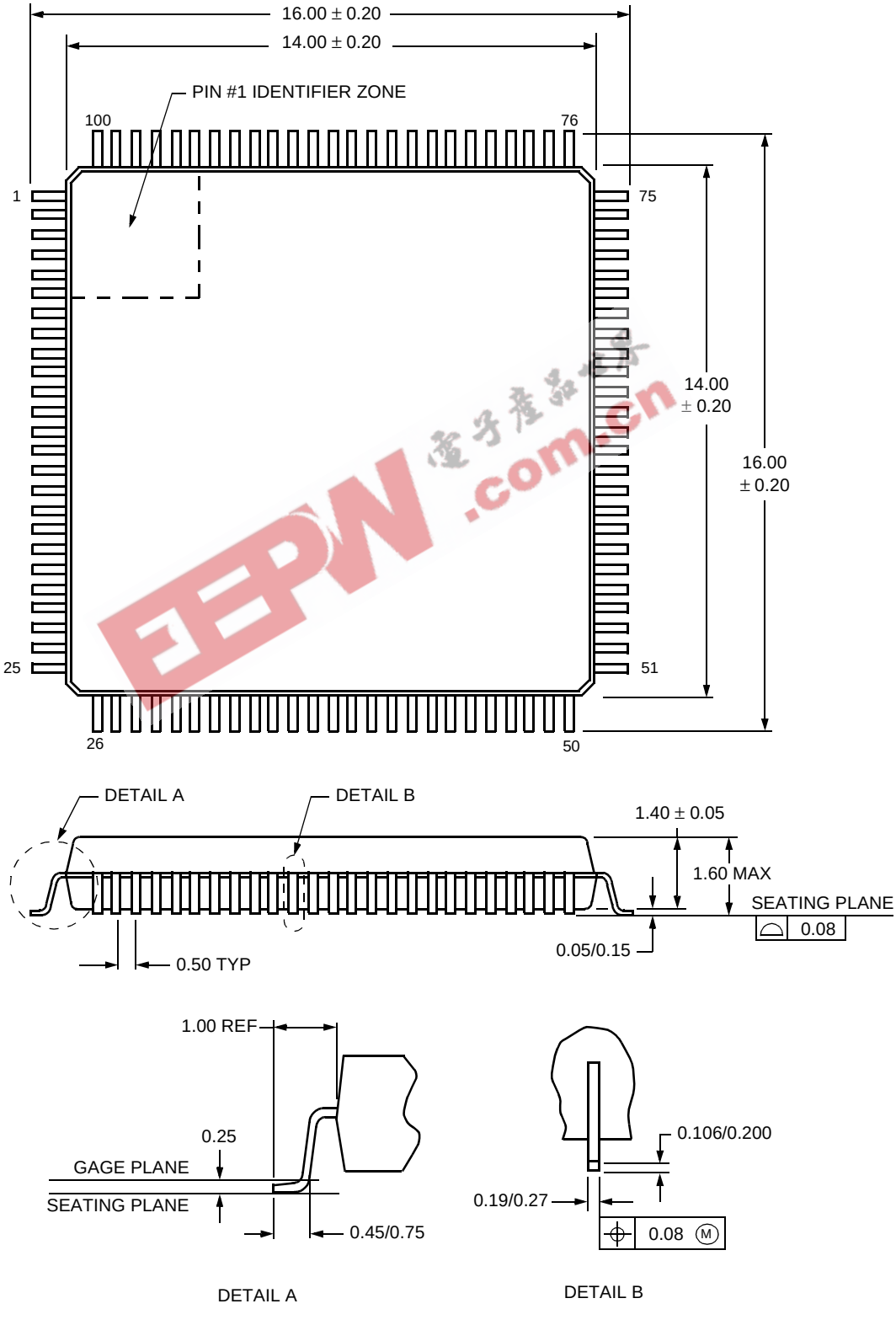

5-2146r.15

Package Outline Drawings (continued)

144-Pin TQFP

Dimensions are in millimeters.

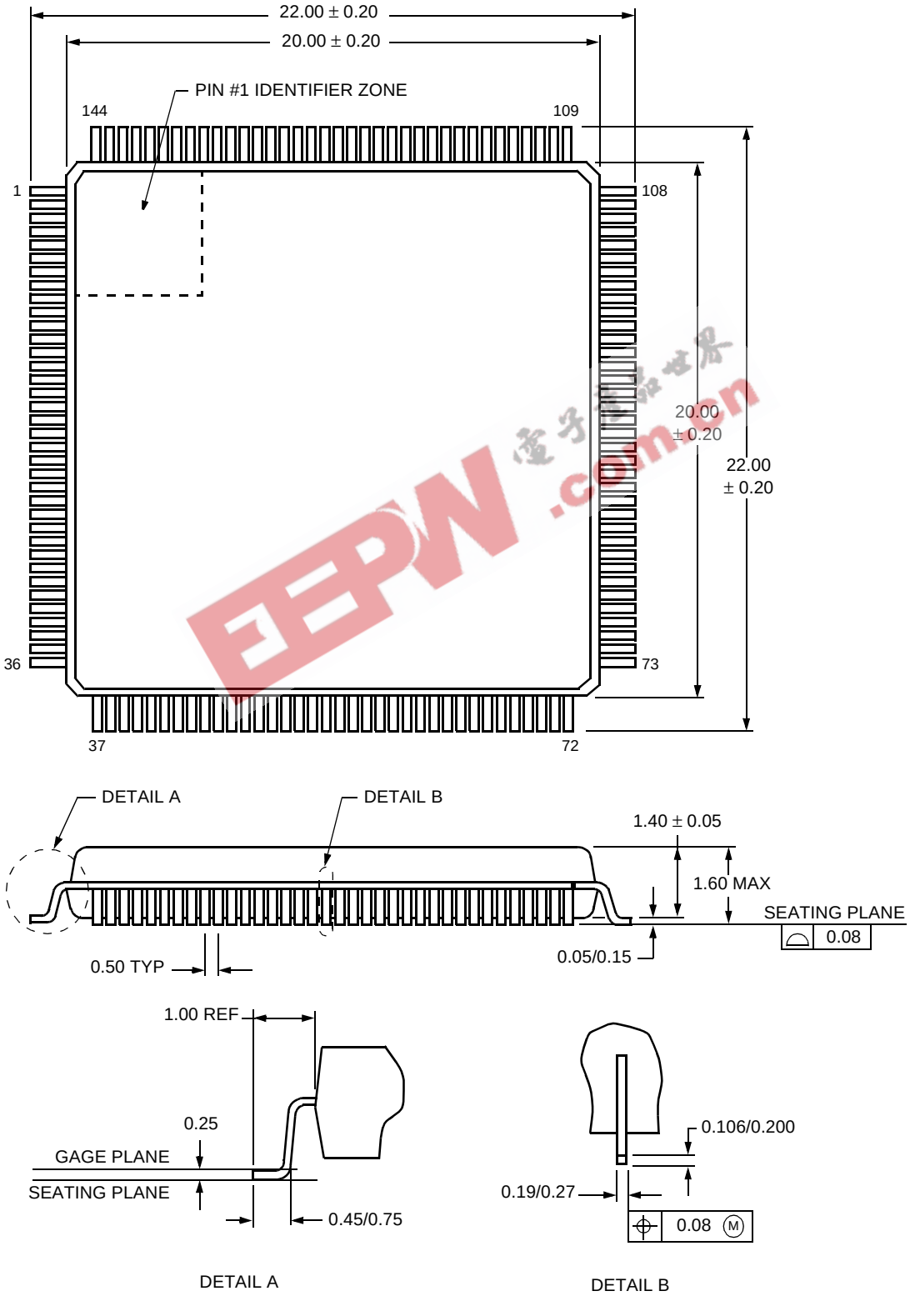

5-3815r.5

Package Outline Drawings (continued)

160-Pin QFP

Dimensions are in millimeters.

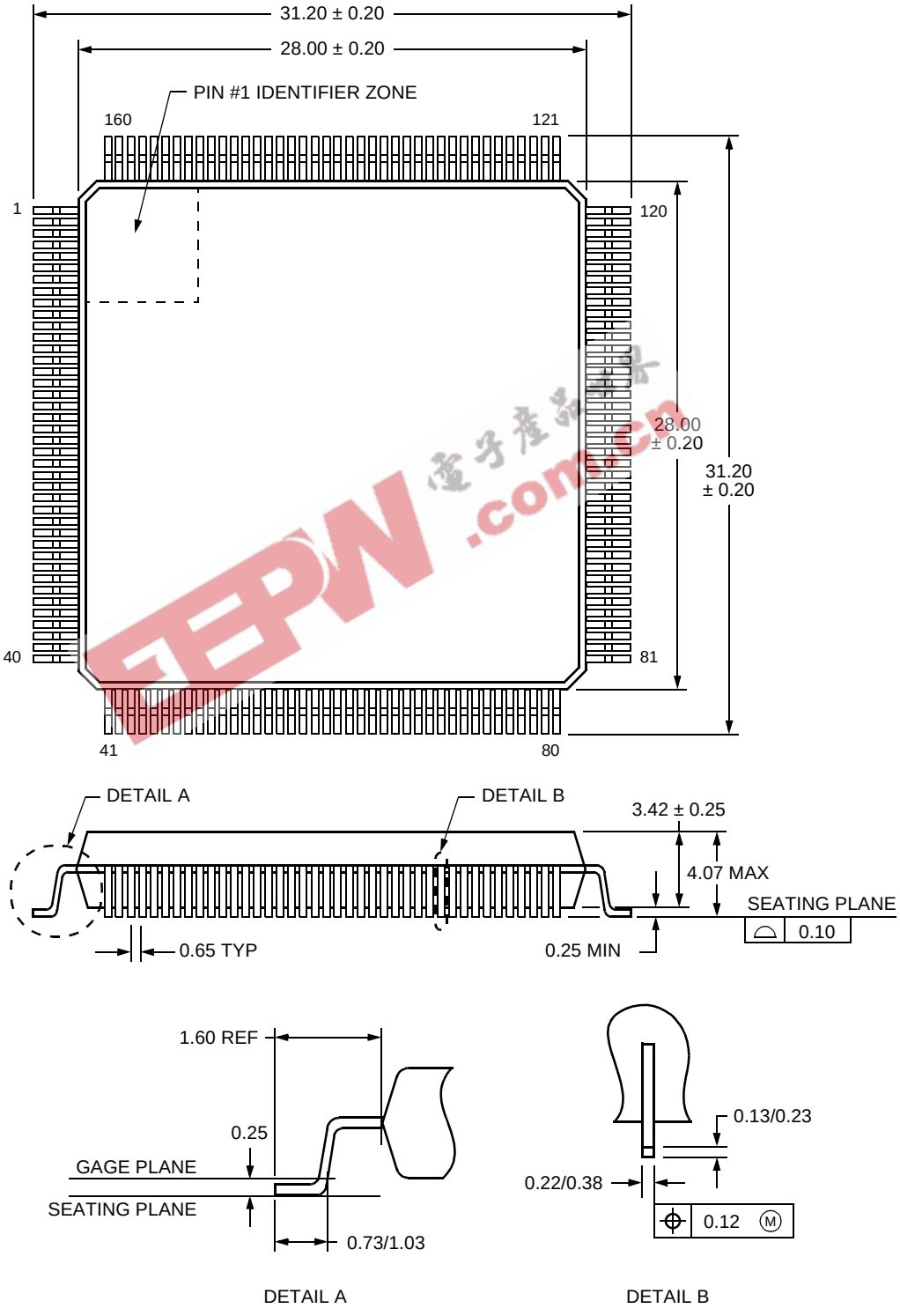

5-2132r.12

Package Outline Drawings (continued)

208-Pin SQFP

Dimensions are in millimeters.

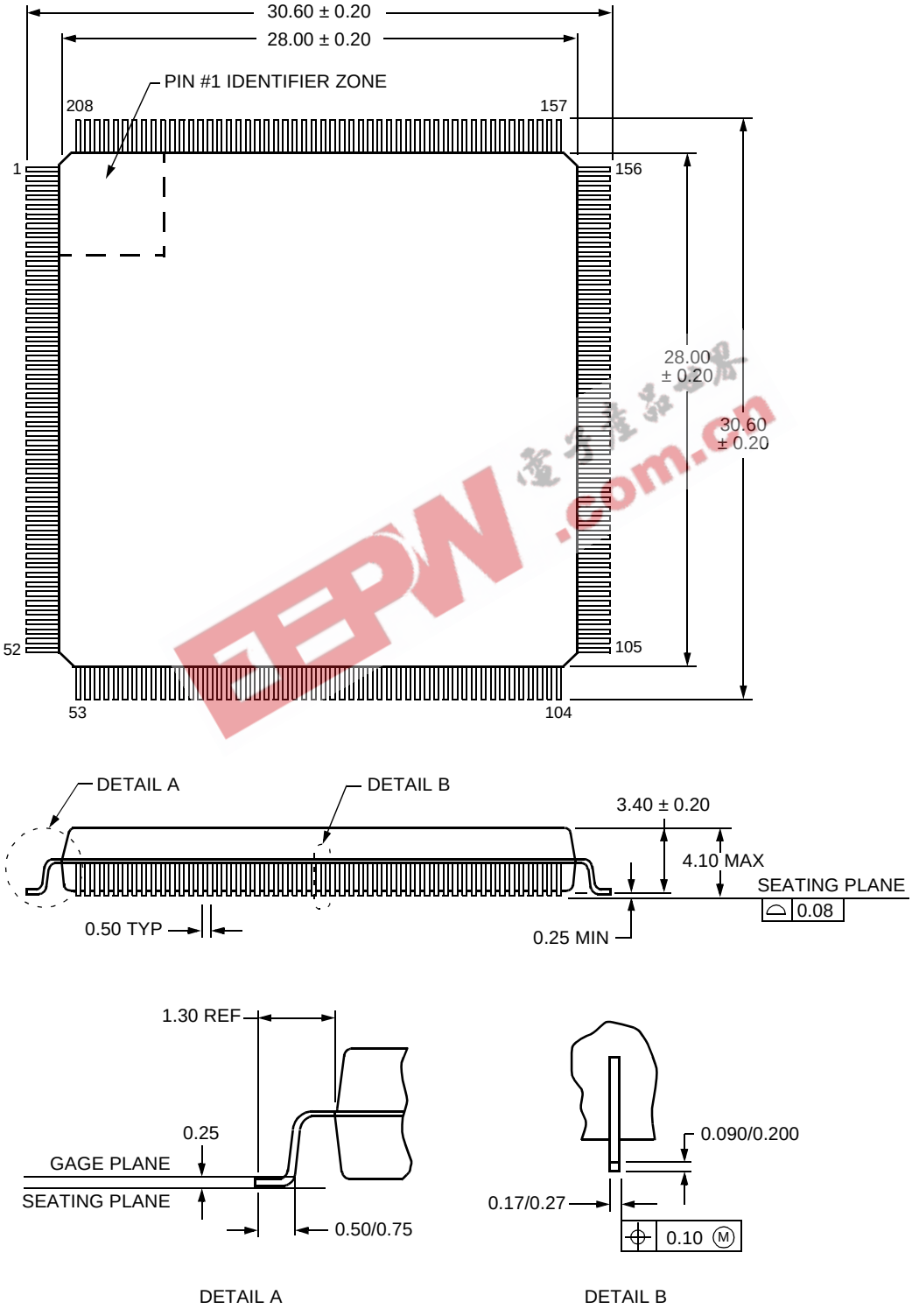

5-2196r.13

Package Outline Drawings (continued)

208-Pin SQFP2

Dimensions are in millimeters.

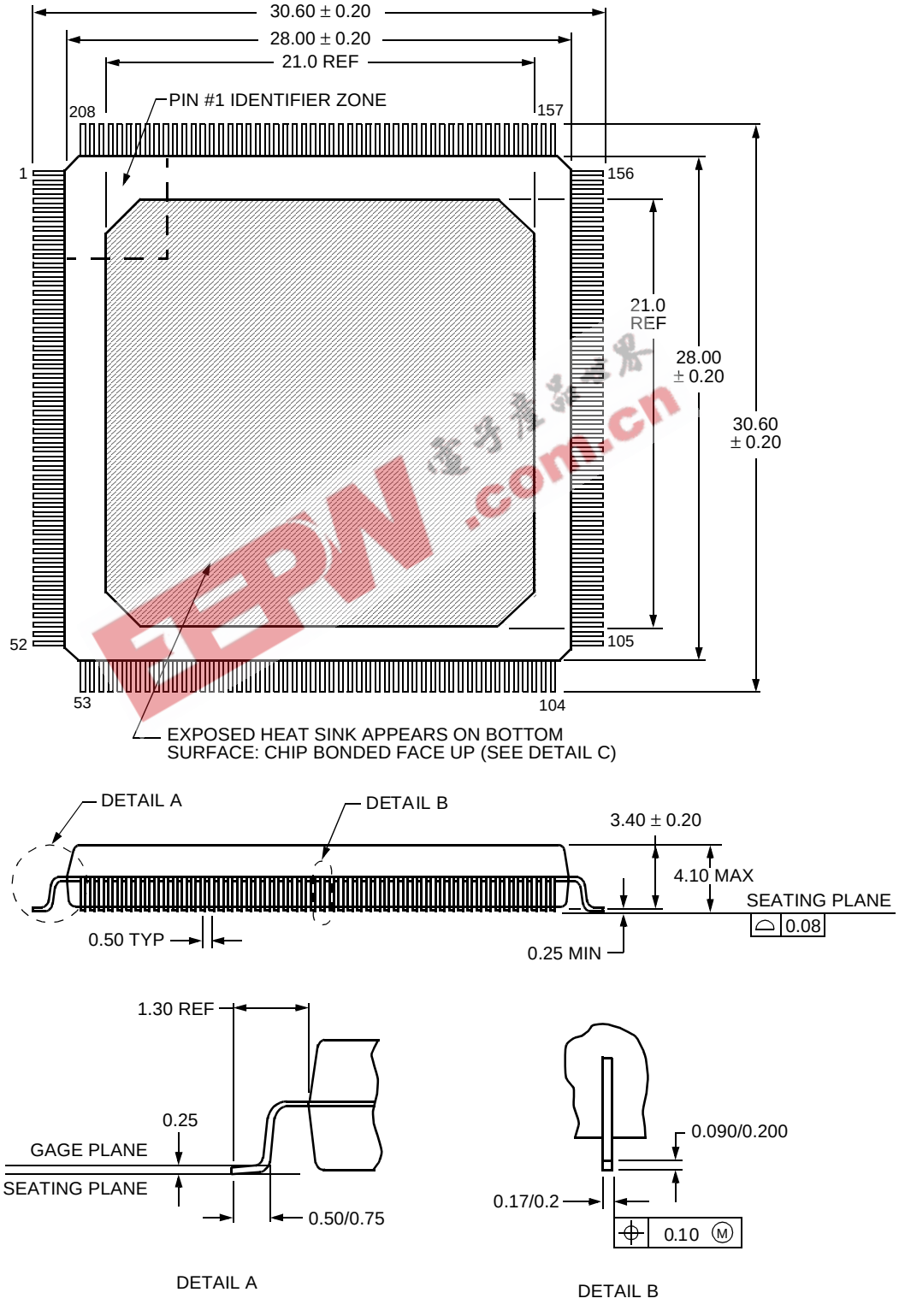

5-3828.a

Package Outline Drawings (continued)

240-Pin SQFP

Dimensions are in millimeters.

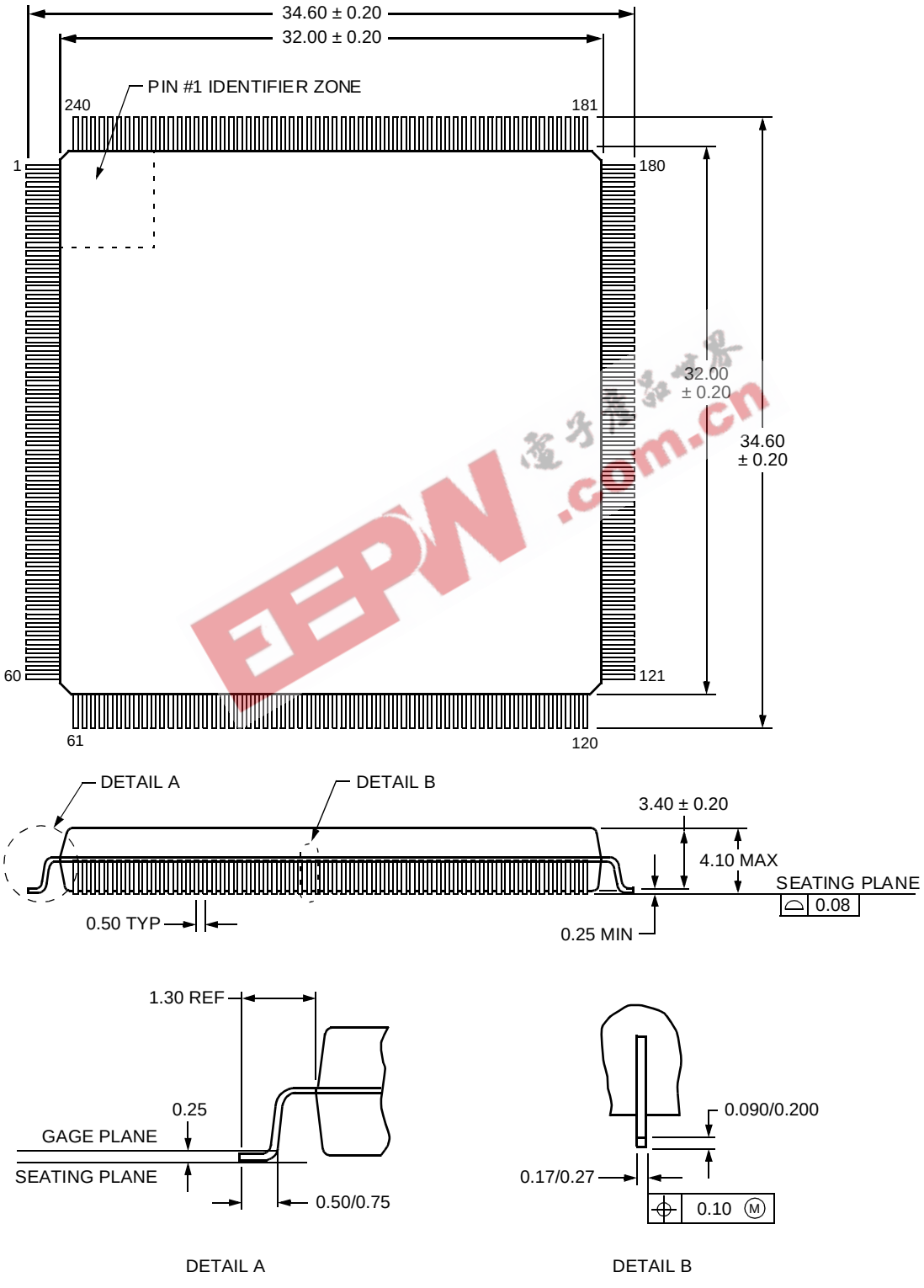

5-2718r.8

Package Outline Drawings (continued)

240-Pin SQFP2

Dimensions are in millimeters.

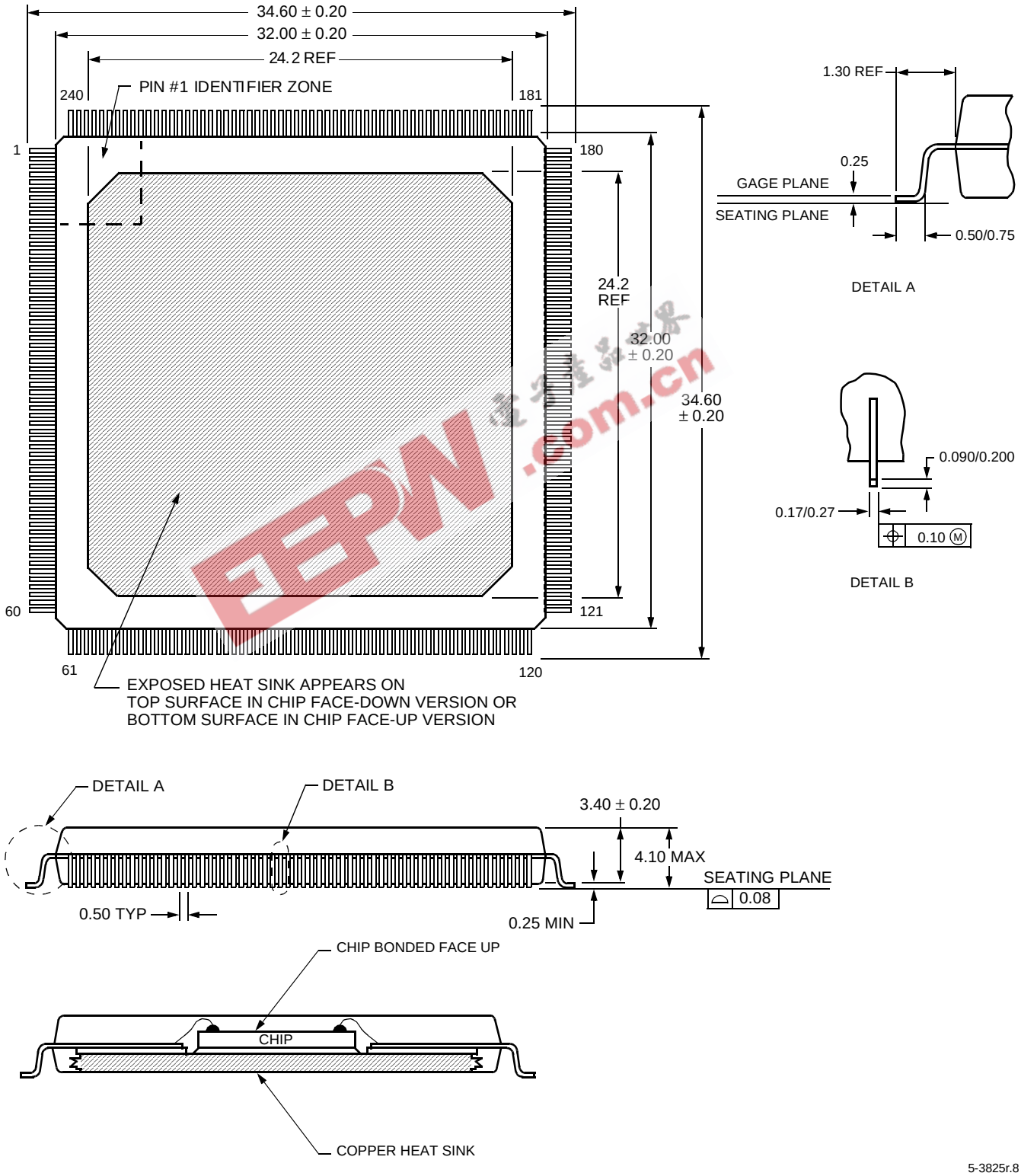

5-3825r.8

Package Outline Drawings (continued)

256-Pin PBGA

Dimensions are in millimeters.

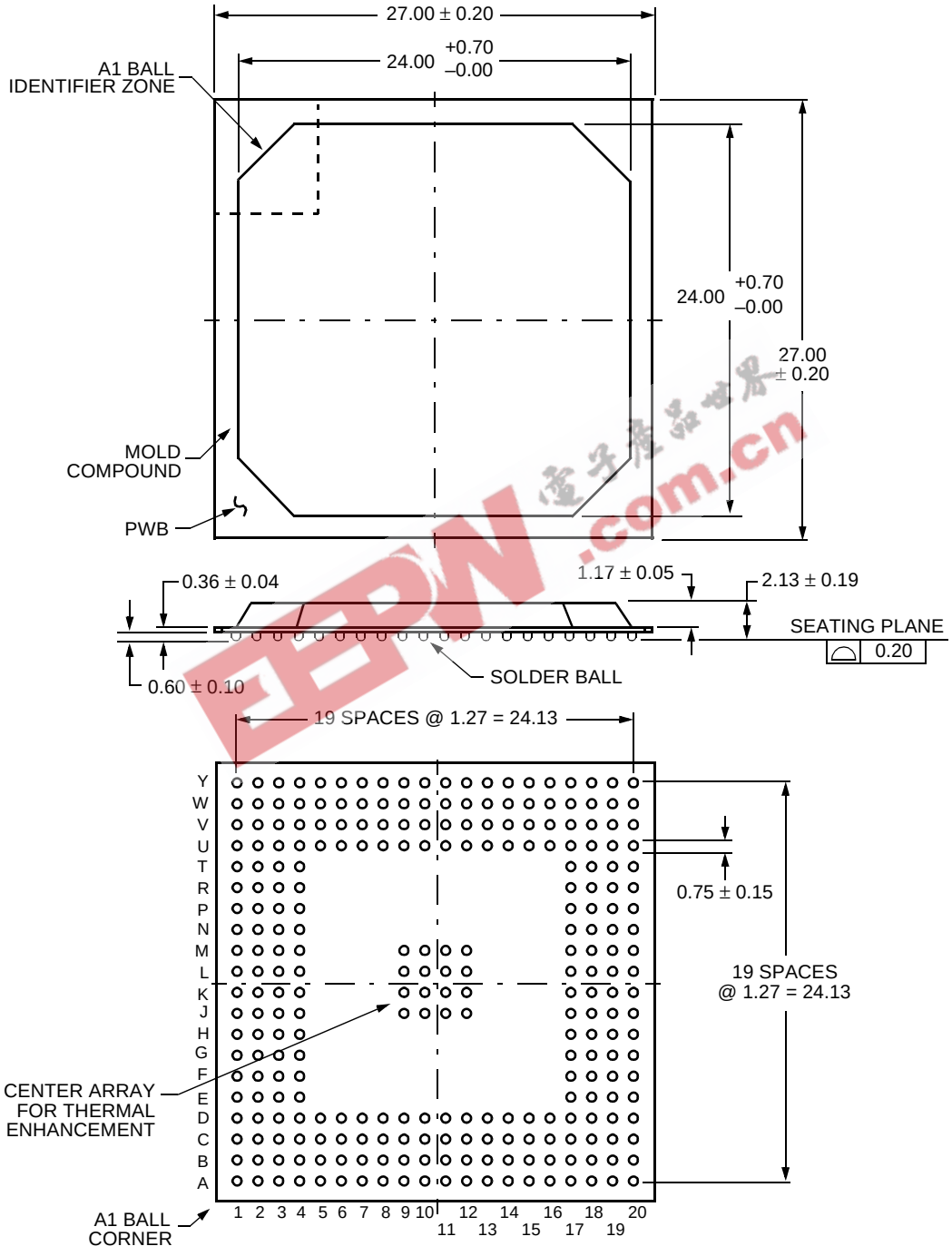

5-4406r.6

Package Outline Drawings (continued)

304-Pin SQFP

Dimensions are in millimeters.

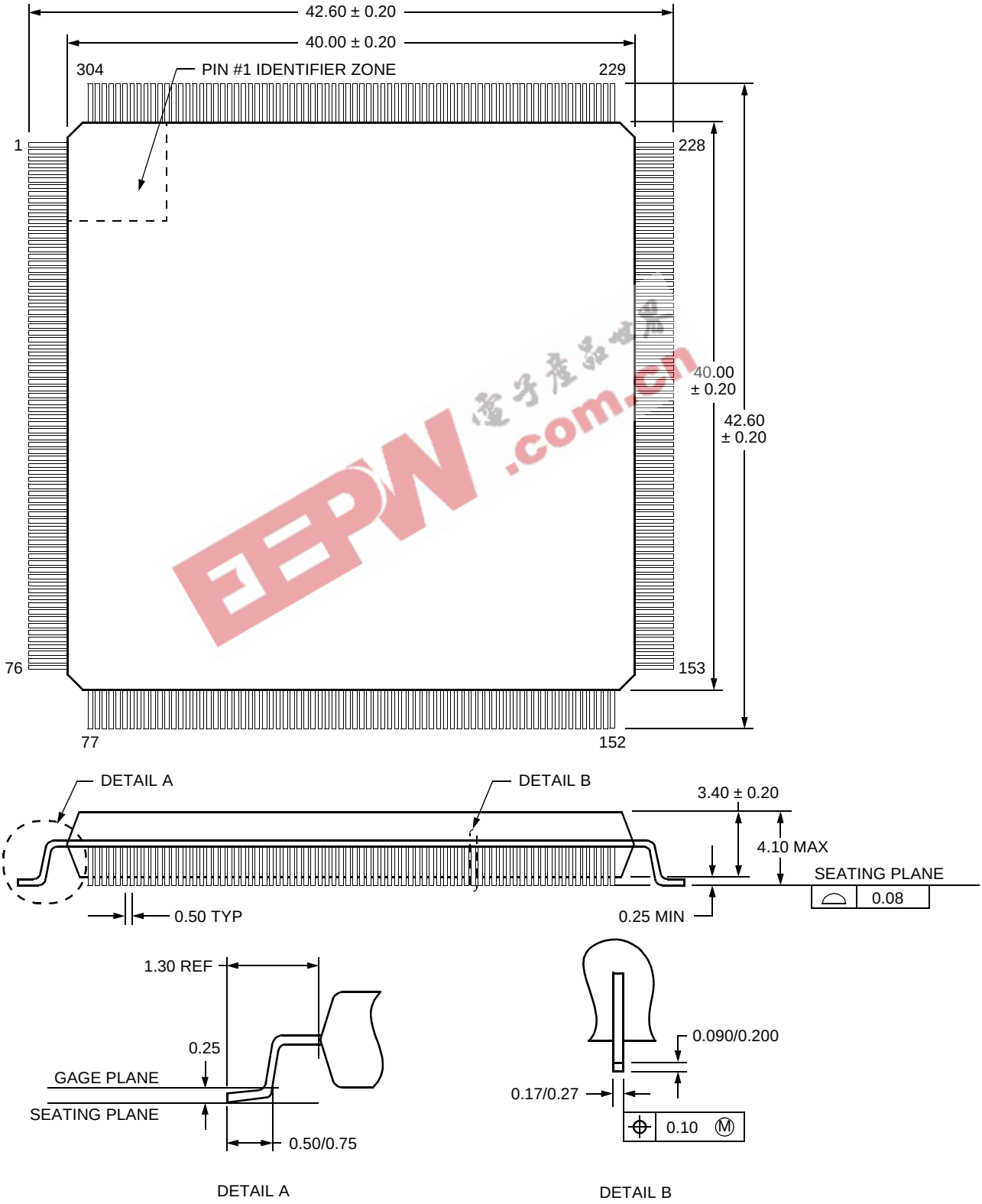

5-3307r.8

Package Outline Drawings (continued)

304-Pin SQFP2

Dimensions are in millimeters.

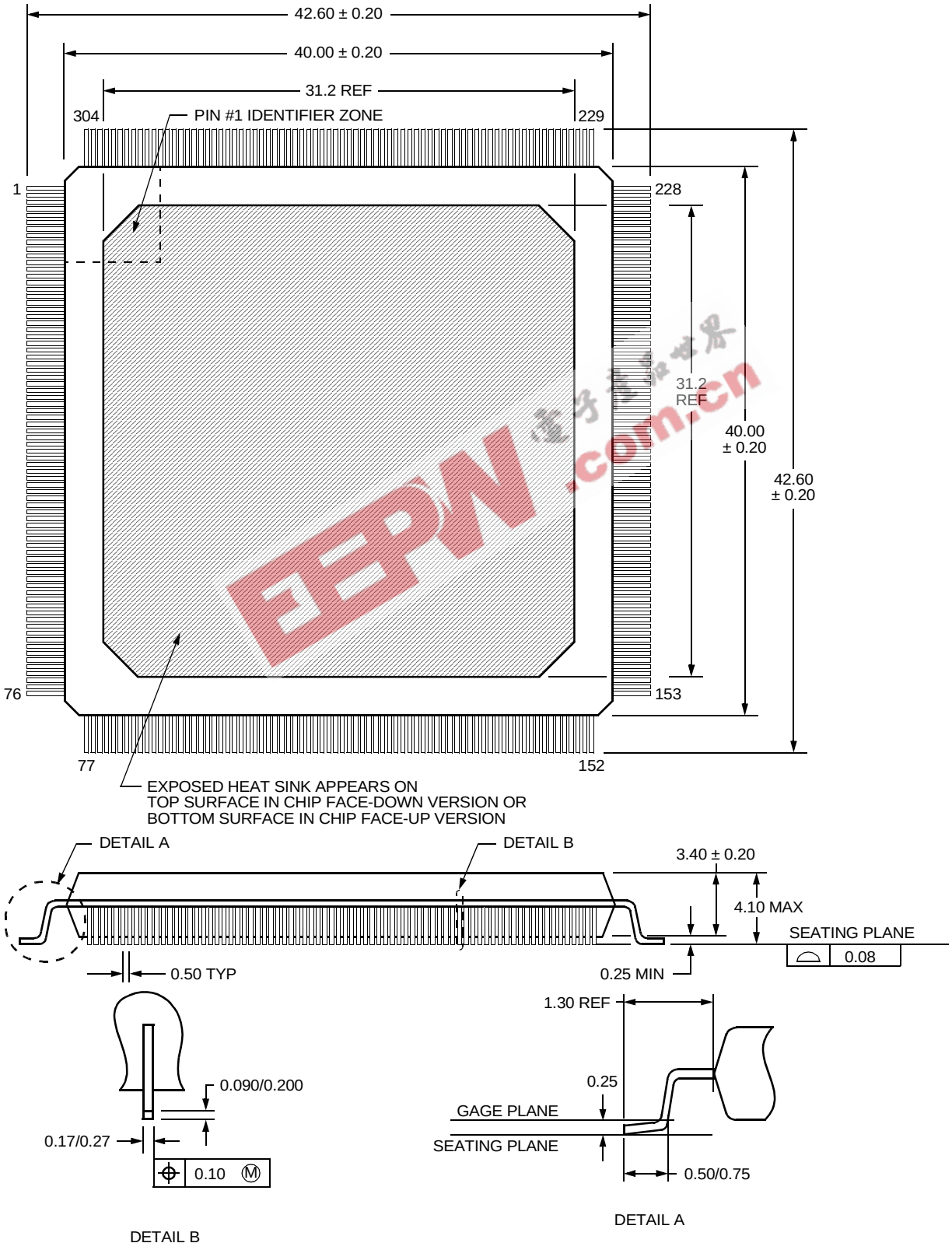

5-3827(F).r8

Package Outline Drawings (continued)

352-Pin PBGA

Dimensions are in millimeters.

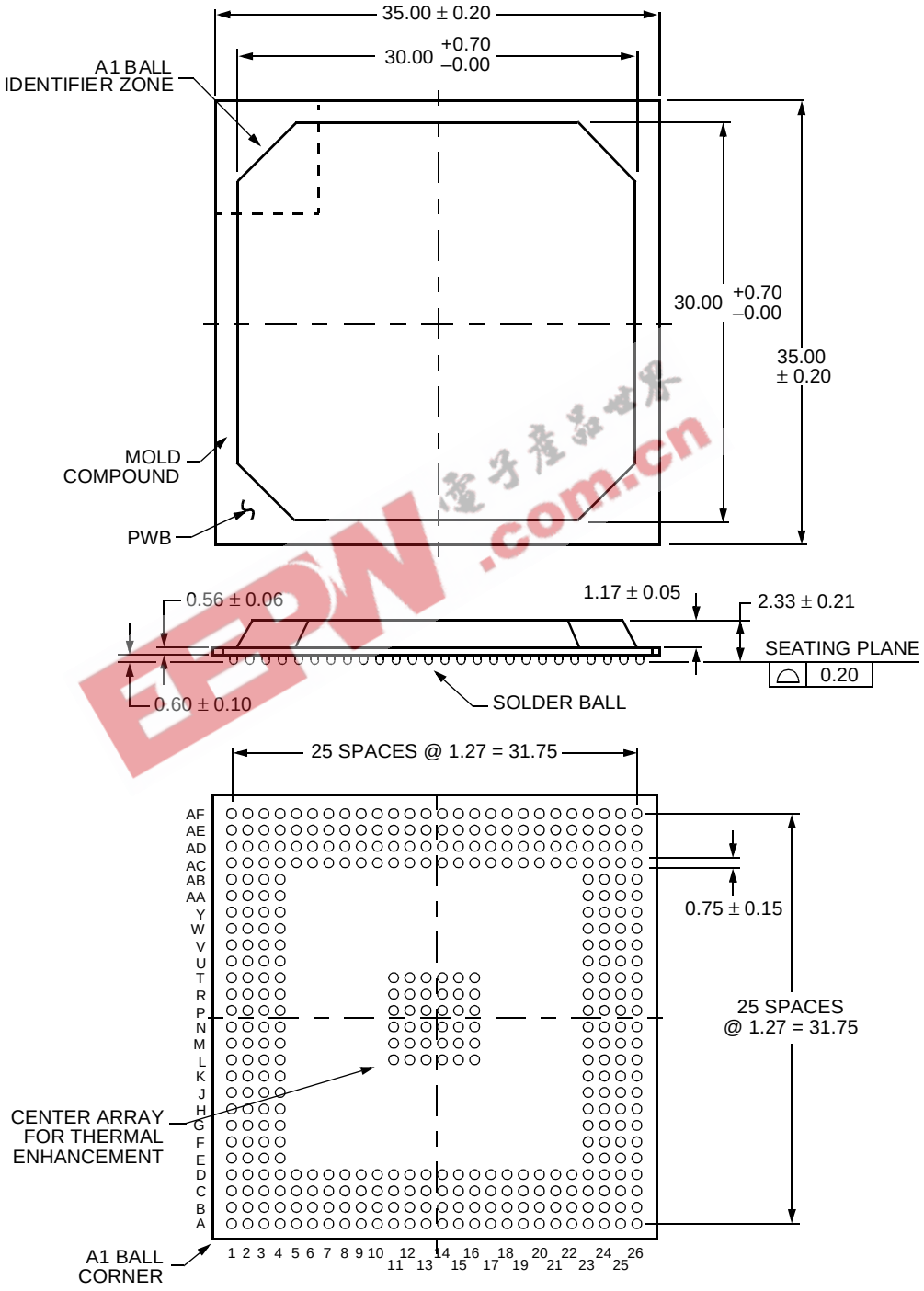

5-4407r.4

Package Outline Drawings (continued)

432-Pin EBGA

Dimensions are in millimeters.

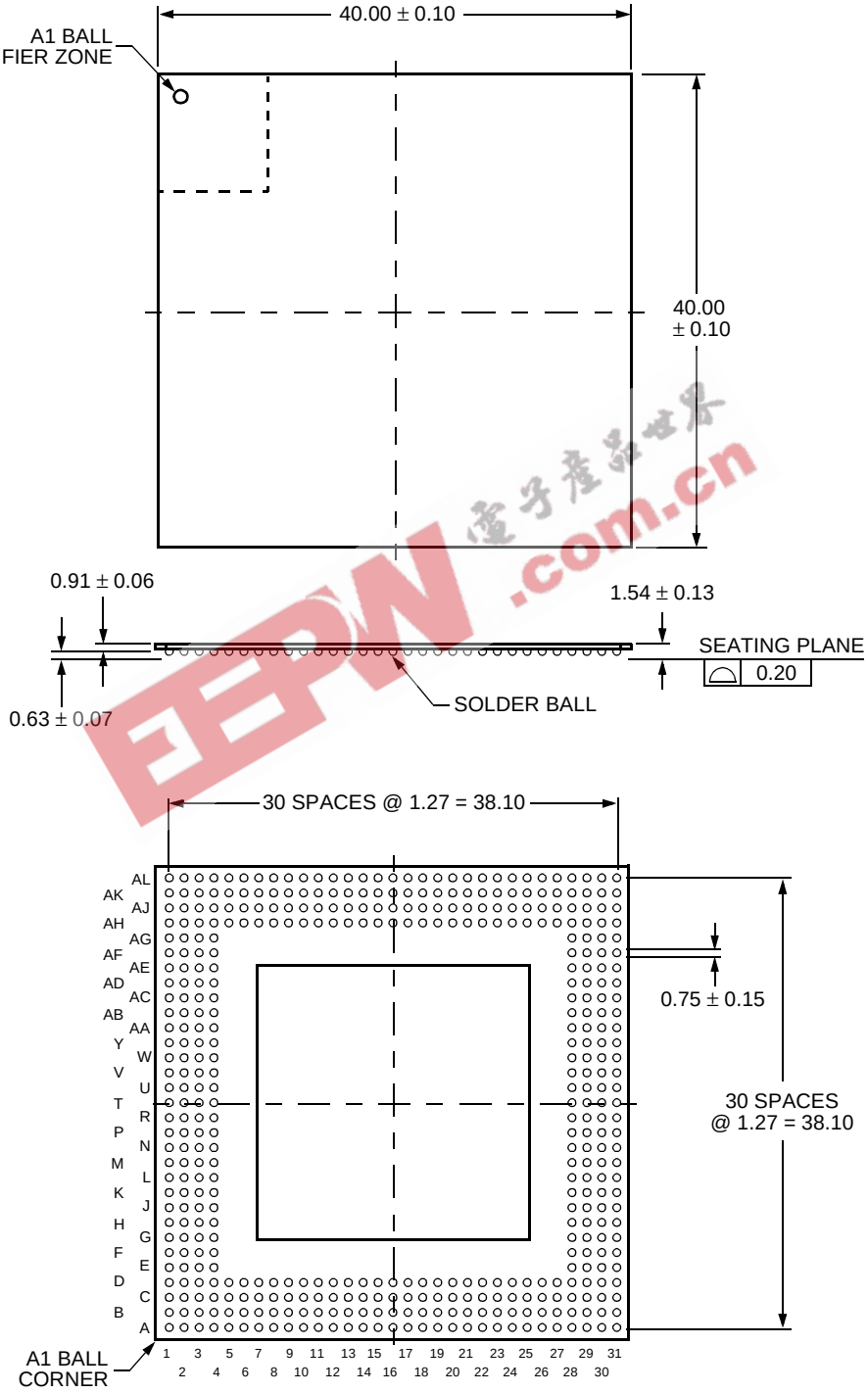

5-4409r.3

Ordering Information

Example:

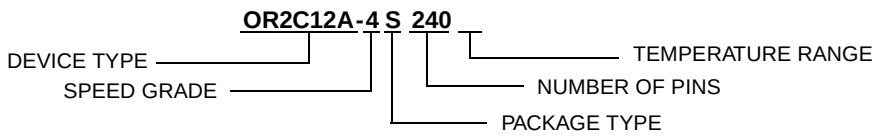

OR2C12A, -4 speed grade, 240-pin shrink quad flat pack, commercial temperature.

Table 56. FPGA Voltage Options

Device	Voltage
OR2CxxA	5.0 V
OR2TxxA	3.3 V
OR2TxxB	3.3 V

Table 57. FPGA Temperature Options

Symbol	Description	Temperature
(Blank)	Commercial	0 °C to 70 °C
I	Industrial	–40 °C to +85 °C

Table 58. FPGA Package Options

Symbol	Description
BA	Plastic Ball Grid Array (PBGA)
BC	Enhanced Ball Grid Array (EBGA)
J	Quad Flat Package (QFP)
M	Plastic Leaded Chip Carrier (PLCC)
PS	Power Quad Shrink Flat Package (SQFP2)
S	Shrink Quad Flat Package (SQFP)
T	Thin Quad Flat Package (TQFP)

EEPW .com.cn

Ordering Information (continued)

Table 59. *ORCA* OR2CxxA/OR2TxxA Series Package Matrix

Packages	84-Pin PLCC	100-Pin TQFP	144-Pin TQFP	160-Pin QFP	208-Pin EIAJ SQFP/ SQFP2	240-Pin EIAJ SQFP/ SQFP2	256-Pin PBGA	304-Pin EIAJ SQFP/ SQFP2	352-Pin PBGA	432-Pin EBGA
	M84	T100	T144	J160	S208/ PS208	S240/ PS240	BA256	S304/ PS304	BA352	BC432
OR2C/2T04A	CI	CI	CI	CI	CI	—	—	—	—	—
OR2C/2T06A	CI	CI	CI	CI	CI	CI	CI	—	—	—
OR2C/2T08A	CI	—	—	CI	CI	CI	CI	—	—	—
OR2C/2T10A	CI	—	—	CI	CI	CI	CI	—	CI	—
OR2C/2T12A	CI	—	—	—	CI	CI	CI	CI	CI	—
OR2C/2T15A	CI	—	—	—	CI	CI	CI	CI	CI	CI
OR2C/2T26A	—	—	—	—	CI	CI	—	CI	CI	CI
OR2C/2T40A	—	—	—	—	CI	CI	—	CI	CI	CI

Key: C = commercial, I = industrial.

Table 60. *ORCA* OR2TxxB Series Package Matrix

Packages	84-Pin PLCC	100-Pin TQFP	144-Pin TQFP	160-Pin QFP	208-Pin EIAJ SQFP/ SQFP2	240-Pin EIAJ SQFP/ SQFP2	256-Pin PBGA	304-Pin EIAJ SQFP/ SQFP2	352-Pin PBGA	432-Pin EBGA
	M84	T100	T144	J160	S208/ PS208	S240/ PS240	BA256	S304/ PS304	BA352	BC432
OR2T15B	—	—	—	—	CI	CI	CI	—	CI	—
OR2T40B	—	—	—	—	CI	CI	—	—	CI	CI

Key: C = commercial, I = industrial.

Notes:
The package options with the SQFP/SQFP2 designation in the table above use the SQFP package for all densities up to and including the OR2C/T15A/B, while the OR2C/T26A and the OR2C/2T40A/B use the SQFP2.

The OR2TxxA and OR2TxxB series is not offered in the 304-pin SQFP/SQFP2 packages.

The OR2C40A is not offered in a 352-pin PBGA.

Index

A

Absolute Maximum Ratings, 129
Adder (see LUT Operating Modes)
Architecture
  Overview, 5
    PLC, 22
    PIC, 25

B

Bidirectional Buffers (BIDIs), 14, 17, 18, 20, 22
    (see also Routing and SLIC)
Bit Stream (see FPGA Configuration)
Bit Stream Error Checking, 47
    (see also FPGA States of Operation)
Boundary Scan, 54—59

C

Clock Distribution Network, 37—39
  Selecting Clock Input Pins, 39
Clock Enable (CE), 1, 5, 7, 15, 16, 24, 134
Comparator (see LUT Operating Modes)
Configuration (see FPGA States of Operation
    or FPGA Configuration)
Control Inputs, 5, 7

E

Electrical Characteristics, 130
Error Checking (see FPGA Configuration)

F

5 V Tolerant I/O, 26—27, 64
FPGA Configuration
  Configuration Frame Format, 43—46
  Configuration Modes, 47, 158—160
    Asynchronous Peripheral Mode, 49, 163
    Daisy-Chaining, 51
    Master Parallel Mode, 47
    Master Serial Mode, 162
    Slave Parallel Mode, 48, 50, 161, 166
    Slave Serial Mode, 49—50, 165
    Synchronous Peripheral Mode, 48, 164
  Data Format, 43—45
  Using *ORCA* Foundry to Generate RAM Data, 43
FPGA States of Operation, 40—43
  Configuration, 41
  Initialization, 40
  Other Configuration Options, 43
  Partial Reconfiguration, 43
  Reconfiguration, 42
  Start-Up, 41

G

GSR (see GSRN)
GSRN, 6, 7, 16, 37, 134

I

IEEE Standard 1149.1, 1
    (see also Boundary Scan)
Initialization (see FPGA States of Operation)
Input/Output Buffers (see PICs)
  Measurement Conditions, 169
  Output Buffer Characteristics, 170—172

J

JTAG (see Boundary Scan)

L

Look-up Table (LUT) Operating Modes, 7—15
  Adder-Subtractor Submode, 10
  Counter Submode, 11
  Equality Comparators, 11
  Logic Modes, 7—9
  Memory Mode, 12—15
    Asynchronous Memory, 12
    Synchronous Memory, 13
  Multiplier Submode, 11
  Ripple Mode, 10
LSR, 5—7, 15—16

M

Maximum Ratings (see Absolute Maximum Ratings)
Multiplier (see LUT Operating Modes)

O

ORCA Foundry Development System Overview, 4
Ordering Information, 189
  Package Matrix, 190
  Package Options, 189
  Temperature Options, 189
  Voltage Options, 189
Output (see PICs)

P

Package Outline Drawings, 174—186
  Package Matrix, 190
  Package Outline Drawings, 173
    84-Pin PLCC, 174
    100-Pin TQFP, 175
    144-Pin TQFP, 176

EEPW .com.cn

Index (continued)

160-Pin QFP, 177
208-Pin SQFP, 178
208-Pin SQFP2, 179
240-Pin SQFP, 180
240-Pin SQFP2, 181
256-Pin PBGA, 182
304-Pin SQFP, 183
304-Pin SQFP2, 184
352-Pin PBGA, 185
432-Pin EBGA, 186
Terms and Definitions, 173
Pin Information, 71—125
84-Pin PLCC, 71
100-Pin TQFP, 73
144-Pin TQFP, 75
160-Pin QFP, 77
208-Pin SQFP/SQFP2, 81
240-Pin SQFP/SQFP2, 86
256-Pin PBGA, 92
304-Pin SQFP/SQFP2, 99
352-Pin PBGA, 106
432-Pin EBGA Pinout, 116
Package Compatibility, 68—70
Pin Descriptions, 71
Power Dissipation, 61—65
5 V Tolerant I/O, 64
OR2CxxA, 61
OR2TxxA, 63
Programmable Function Unit (PFU), 5—16
Control Inputs, 5, 7
Operating Modes, 7—15
Latches/Flip-Flops, 15—16
Programmable Input/Output Cells (PICs), 25—31
5 V Tolerant I/O, 26
Architecture, 29—30
Inputs, 25
Outputs, 26
Open-Drain Output Option, 26
Propagation Delays, 26
Overview, 25
Zero-Hold Input, 25
Programmable Logic Cells (PLCs), 5—24
Architecture, 22—24
Latches/Flip-Flops, 15—16
PFU, 5—16
Routing, 17—24

R

RAM (see also FPGA Configuration), 17, 44, 135, 142
Dual-port, 3, 7, 13—15
Single-port, 3, 7, 12—15
Recommended Operating Conditions, 129
Reconfiguration (see FPGA States of Operation)
Routing
3-Statable Bidirectional Buffers, 17—18, 148
Clock Routing, 24, 149—153
(see also Clock Distribution Network)
Configurable Interconnect Points (CIPs), 17
Fast-Carry Routing, 24
Inter-PLC Routing Resources, 18—19
Interquad Routing, 5, 17, 32—36
Intra-PLC Routing Resources, 18
Minimizing Routing Delay, 20
PLC Routing, 17—24, 34
Programmable Corner Cell Routing, 37
PIC Routing, 27—31

S

Boundary Scan, 54–59
Global 3-State Control (TS_ALL), 37, 66
Global Set/Reset (GSRN), 7, 16, 37
Internal Oscillator, 37
Readback Logic, 37
Start-up, 41 (see also FPGA States of Operation)
Subtractor (see LUT Operating Modes)
System Clock (see Clock Distribution Network)

T

3-state (see Bidirectional Buffers, TS_ALL)
Timing Characteristics, 132–168
Asynchronous Peripheral Configuration Mode, 163
Boundary-Scan Timing, 168
Clock Timing, 149
General Configuration Mode Timing, 158
Master Parallel Configuration Mode, 162
Master Serial Configuration Mode, 161
PFU Timing, 132
PIO Timing, 154
PLC Timing, 148
Readback Timing, 167
Slave Parallel Configuration Mode, 166
Slave Serial Configuration Mode, 165
Tolerant I/O, 26 (see also 5 V Tolerant I/O)
TS_ALL, 1, 37, 66

U—Z

Zero-hold Inputs, 25

EEPW .com.cn

Notes

EEPW .com.cn

For additional information, contact your Microelectronics Group Account Manager or the following:

INTERNET: **http://www.lucent.com/micro** or for FPGA information, **http://www.lucent.com/orca**
E-MAIL: **docmaster@micro.lucent.com**
N. AMERICA: Microelectronics Group, Lucent Technologies Inc., 555 Union Boulevard, Room 30L-15P-BA, Allentown, PA 18103
1-800-372-2447, FAX 610-712-4106 (In CANADA: **1-800-553-2448**, FAX 610-712-4106)
ASIA PACIFIC: Microelectronics Group, Lucent Technologies Singapore Pte. Ltd., 77 Science Park Drive, #03-18 Cintech III, Singapore 118256
Tel. (65) 778 8833, FAX (65) 777 7495
CHINA: Microelectronics Group, Lucent Technologies (China) Co., Ltd., A-F2, 23/F, Zao Fong Universe Building, 1800 Zhong Shan Xi Road, Shanghai 200233 P. R. China **Tel. (86) 21 6440 0468**, **ext. 316**, FAX (86) 21 6440 0652
JAPAN: Microelectronics Group, Lucent Technologies Japan Ltd., 7-18, Higashi-Gotanda 2-chome, Shinagawa-ku, Tokyo 141, Japan
Tel. (81) 3 5421 1600, FAX (81) 3 5421 1700
EUROPE: Data Requests: MICROELECTRONICS GROUP DATALINE: **Tel. (44) 1189 324 299**, FAX (44) 1189 328 148
Technical Inquiries: GERMANY: **(49) 89 95086 0** (Munich), UNITED KINGDOM: **(44) 1344 865 900** (Ascot),
FRANCE: **(33) 1 40 83 68 00** (Paris), SWEDEN: **(46) 8 594 607 00** (Stockholm), FINLAND: **(358) 9 4354 2800** (Helsinki),
ITALY: **(39) 02 6608131** (Milan), SPAIN: **(34) 1 807 1441** (Madrid)

Lucent Technologies Inc. reserves the right to make changes to the product(s) or information contained herein without notice. No liability is assumed as a result of their use or application. No rights under any patent accompany the sale of any such product(s) or information. *ORCA* is a registered trademark of Lucent Technologies Inc. Foundry is a trademark of Xilinx Inc.

Copyright © 1999 Lucent Technologies Inc.
All Rights Reserved

June 1999
DS99-094FPGA (Replaces DS98-022FPGA)

microelectronics group

Lucent Technologies
Bell Labs Innovations