Power Zener Diodes

Parameter / Type No.	Absolute Maximum Ratings					Electrical Characteristics (Ta=25°C)							Others		
	P_R (W)	V_{DC} (V)	I_{ZSM} (A)	Tj (°C)	Tstg (°C)	V_Z (V)	I_R (mA)	I_R (H) (mA)	Temperature dependence of breakdown voltage V/°C	R_Z (Ω)	V_F (V)		Mass	Remarks	Fig.
	P.W=5ms		Rectangular wave 10ms single shot			I_Z=1mA Instantaneous	V_R=V_{DC} max	V_R=V_{DC} Ta=150°C max	I_Z=1mA	I_Z=1.0A to 10A typ.	max	I_F (A)	(g)		
PZ 628	1500	20	65	–40 to +150		28±3	0.5	1.0	0.02	0.03	0.95	5.0	2.6		Ⓐ
SFPZ-68	50		2.0				0.01	1.0	0.02	0.03	0.95	1.0	0.072	Surface Mount	Ⓑ
SPZ-G36	450	30	11.0			36±3.6	0.005	0.1	0.03	0.24	0.98	3.0	0.29	Power Surface Mount	Ⓒ

PZ 628

V_{ZUP}—Pulse Characteristics

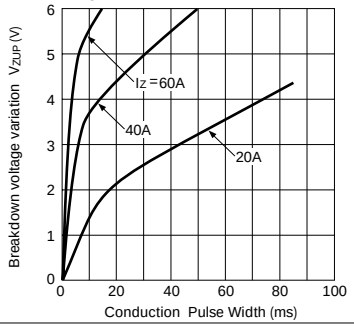

I_R—Pulse Width Characteristics

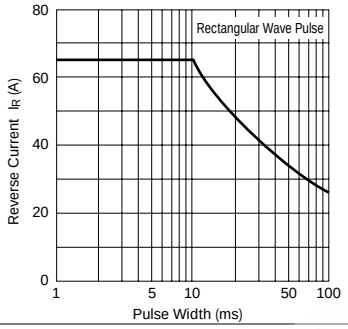

SFPZ-68

SPZ-G36

External Dimensions
(Unit: mm)

Flammability:
UL94V-0 or Equivalent

Fig.Ⓐ

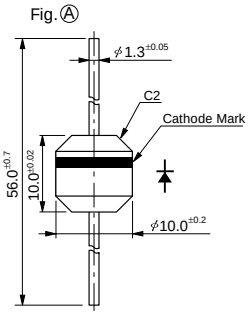

Fig.Ⓑ

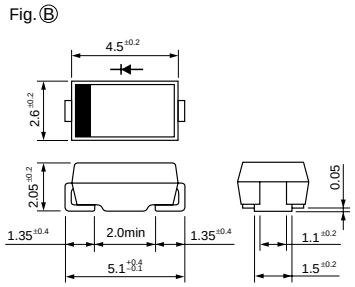
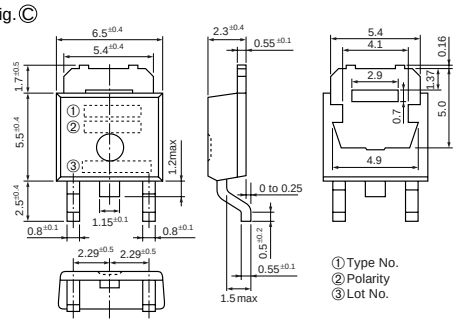
Fig.Ⓒ