STK-075G,077G, 078G,080G,082G, 083G

thick film hybrid IC

15 to 40W min AF POWER AMP.

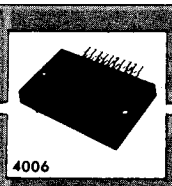

Features

- © IMST, 1 Channel by 2 Power Supplies.
- AF output power STK-075G: 15W min., STK-077G: 20W min., STK-078G: 24W min., STK-080G: 30W min., STK-082G: 35W min., STK-083G: 40W min.
- Low distortion.
- Stable even at high temperature range.

MAXIMUM RATINGS / Ta=25°C

		STK-075G	STK-077G	STK-078G	STK-080G	STK-082G	STK-083G	unit
Maximum Supply Voltage	V_{CC} max	±28	±33	±35	±40	±43	±46	V
Operating Case Temperature	T_C	→	→	→	→	→	105	°C
Storage Temperature	T_{stg}	→	→	→	→	→	−30 to +105	°C
Allowable Load Shorting Time (in appointed condition)	t_s	→	→	→	→	→	2	sec

RECOMMENDED OPERATION CONDITION / Ta=25°C

		STK-075G	STK-077G	STK-078G	STK-080G	STK-082G	STK-083G	unit
Recommended Supply Voltage	V_{CC}	±20	±23	±25	±27.5	±30	±32	V
Load Resistance	R_L	→	→	→	→	→	8	ohm

OPERATION CHARACTERISTICS/Ta=25°C, recommended operating condition, Rg=600ohm, VG=33.4dB

			STK-075G	STK-077G	STK-078G	STK-080G	STK-082G	STK-083G	unit
Quiescent Current	I_{CCO}		→	→	→	→	→	100	mAmax
Output Power	Po	THD=0.03% f=20 to 20kHz	15	20	24	30	35	40	Wmin
Distortion	THD	f=20 to 20kHz rated output power	→	→	→	→	→	0.05	%max
Frequency Response	f	Po=1W, −1dB	→	→	→	→	→	10 to 100k	Hz
Input Resistance	r_i	Po=1W f=1kHz	→	→	→	→	→	52k	ohm

EQUIVALENT CIRCUIT

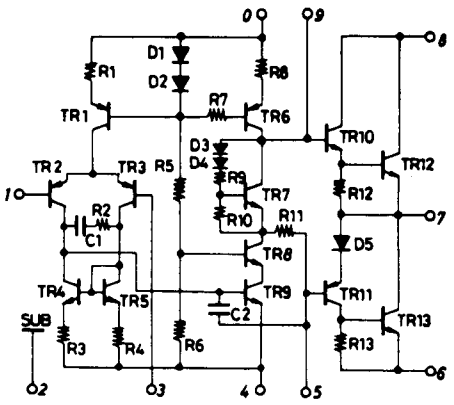

APPLICATION: AF Power Amp.

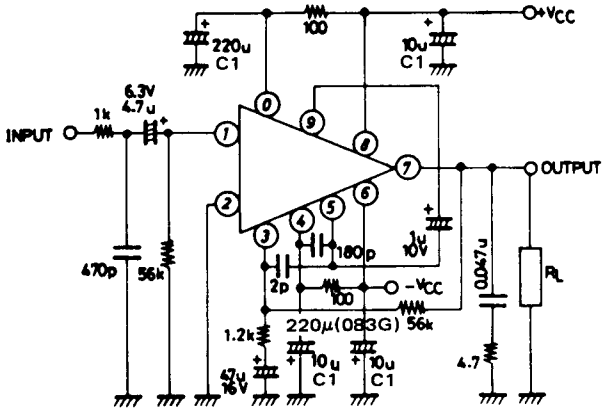

	C1
STK-075G, 077G, 078G	35V
STK-080G, 082G, 083G	50V

See the operation characteristics on this specification.

EEPW 電子產品世界 .com.cn