OCO-SM14S

Through hole OCXO
Sine wave

QuartzCom
the communications company

Features

- Applications: GPS, base-station, synchronisation, satelite-modem
- Small case size (DIL14 / 4 pin)
- Wide operating temperature range from -40 up to +85 °C
- Short warm up time of < 30 s

Parameter	Specification		
Frequency range	10.0000 ~ 60.0000 MHz		
Standard frequencies	10.00, 12.80, 16.00, 16.384, 20.00, 25.00 40.00 & 52.00 MHz		
Frequency stability vs. operating temperature range (tighter stability on request)	≤ ±0.20 ppm	0.3 ppm (peak to peak)	over -40 ~ +85 °C
	≤ ±0.15 ppm	0.2 ppm (peak to peak)	over -20 ~ +70 °C
	≤ ±0.075 ppm	0.1 ppm (peak to peak)	over -10 ~ +60 °C
vs. supply voltage change	≤ ±0.10 ppm	±0.2 V	
vs. load change	≤ ±0.01 ppm	±10 %	
vs. aging after 30 days of operation	≤ ±0.30 ppm	1st year	
vs. long term aging	≤ ±2.50 ppm	10 years	
Short term stability	< 5 x 10^{-10}	Allan deviation over 0.1 ~ 30 s	
Output waveform	sine wave	0 ~ 4 dBm	
Output load	50 Ω	±5 %	
Supply voltage (1)	+5.0 V	±0.2 V	
Steady-state current consumption @ +25 °C	< 85 mA		
Warm-up time @ 25 °C	< 30 s	within spec	
Frequency pulling range	> ±3 ppm	positive slope	
Vcontrol (Vc) via external voltage	0.5 ~ +5.0 V		
Vcontrol (Vc) via external potentiometer	10 kΩ		
Phase noise @ 10 MHz carrier frequency	-110 dBc/Hz -135 dBc/Hz -145 dBc/Hz -150 dBc/Hz	@ 10 Hz @ 100 Hz @ 1 kHz @ 10 kHz	
Harmonics	< -10 dBc		
Spurious	< -70 dBc		
Operating temperature range	-10 ~ +60 °C, -20 ~ +70 °C or -40 ~ +85 °C		
Storage temperature range	-65 ~ +125 °C		
(1) Supply voltage 3.3 V or 12.0 V on request			

Environmental test	
vibration	acceleration: 10 g; 10 Hz up to 2'000 Hz and down to 10 Hz;
shock	2'000 g, half sine, 3 ms (3 shocks each, 6 directions)

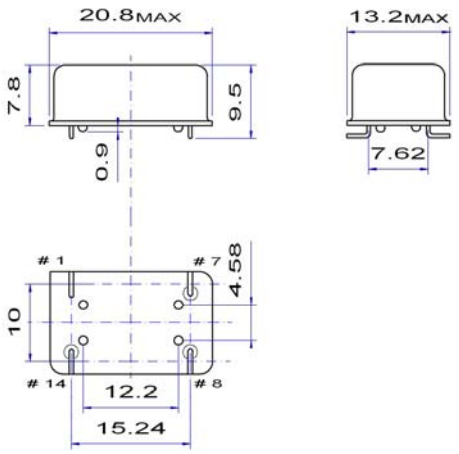

Pin function:

# 1	Vc
# 7	GND
# 8	RF Output
# 14	Vdc

Example for solder pattern

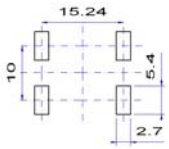

Do not design any conductive path between the patter

Example for IR reflow soldering temperature

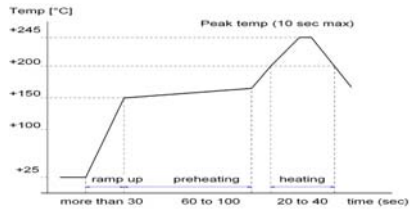

2002/95/EC RoHS compliant

13 May. 10

QuartzCom AG
sales@quartzcom.com

QuartzCom Asia
sales-asia@quartzcom.com

QuartzCom USA
sales-usa@quartzcom.com

www.quartzcom.com

ISO 9001
BUREAU VERITAS
Certification